Teleline™

5-card Shelf CCC model 751112/15

Description and Installation

925W751022-03E

POSITRON

Positron Inc.

Contents

Chapter 1 – General Information

1.1 Publication Information 6

1.2 About this Guide 7

1.3 Compliance Information 7
FCC Part 15 7
Product Safety. 7
Related Documentation. 7
Positron Products and Services 7

1.4 Service and Support 8
Positron Contact Information. 8
Technical Customer Support. 8
Customer Training. 9
Repair Service. 9

1.5 Teleline Warranty 10
Limitation of Liability 10
Cancellation and Rescheduling Charges 11

Chapter 2 – Overview

2.1 Introduction 14

2.2 Physical Specifications 15

2.3 Cable Options 16

Chapter 3 – Installation

3.1 Installing the 5-card Shelf on a Wall 20

3.2 Shelf Mounting 21
To install the 5-card Shelf CCC model 751112/15: 21

3.3 Ground Connections 24
To connect the ground of the 5-card Shelf CCC model 751112/15 . . . 24
Powering model 751313MC or 751318MC from an AC Source 27

3.4 Cable Connections 29
Station Side Cable Connections 30
To install the Station side cable connections: 30
CO Side Polyethylene Insulated Cable (PIC) Connection. 33
To connect the CO side cable using the PIC stub 33

3.5 Power Connections 36
External Power Supply 36
To power the shelf via the Station cable 37
To power the shelf via the power cable 38

3.6 Internal Power Supply 40
Internal Power Supplies Configurations 40
To install the power cable 42

3.7 Power Alarm Contact Features and Specification 44

3.8 Temperature Considerations 45
To calculate the temperature inside the shelf 47
To reduce the temperature inside the shelf: 48

3.9 Card Insertion 50
To insert a card or cards into the shelf: 50

Appendix A – Acronyms

Acronyms 52

Chapter 1

General Information

1.1 Publication Information

© 2014 Positron Inc.

Teleline 5-card Shelf CCC model 751112/15
Description and Installation Guide

Part number:
925W751022-03E

Publication date:
January 8, 2014

Published By
Positron Inc.
5101 Buchan Street, Suite 220
Montreal, Quebec, Canada
H4P 2R9
Telephone: US and Canada: 1-888-577-5254
International: 1-514-345-2220
www.PositronPower.com

Trademarks
Teleline is a trademark of Positron Inc.

Product names, other than Positron's, mentioned herein may be trademarks and/or registered trademarks of their respective companies

Confidentiality Notice
The information contained in this document is the property of Positron Inc. Except as specifically authorized in writing by Positron Inc., the holder of this document: 1) shall keep all information contained herein confidential and shall protect same in whole or in part from the disclosure and dissemination to all third parties, and 2) shall use same for operating and maintenance purposes only.

Disclaimer Notice
Although Positron Inc. has made every effort to ensure the accuracy of the information contained herein, this document is subject to change without notice.

1.2 About this Guide

This guide introduces you to the Teleline 5-card Shelf CCC model 751112/15. This guide was designed to be read from beginning to end.

1.3 Compliance Information

1.3.1 FCC Part 15

This equipment has been tested and found to comply with the limits for a Class A digital device, pursuant to part 15 of the FCC Rules. These limits are designed to provide reasonable protection against harmful interference when the equipment is operated in a commercial environment. This equipment generates, uses, and can radiate radio frequency energy and, if not installed and used in accordance with the instruction manual, may cause harmful interference to radio communications. Operation of this equipment in a residential area is likely to cause harmful interference in which case the user will be required to correct the interference at his own expense.

Changes or modifications not expressly approved by the party responsible for compliance could void the user's authority to operate the equipment.

1.3.2 Product Safety

This equipment is compliant with CSA CAN/CSA-C22.2 No. 60950-1-07.

1.3.3 Related Documentation

For any other technical document relating this system installation or applications cards and shelves, please refer to the Positron Web site: www.PositronPower.com.

1.3.4 Positron Products and Services

Positron engineers and manufactures high voltage isolation products to protect personnel and telecommunications circuits in high voltage areas that are susceptible to the effects of Ground Potential Rise (GPR).

Positron is the leader in isolation technology with its Teleline wireline products and TeleLite optical fiber wireline isolation/protection product families. Positron provides total flexibility in product configuration – from standalone units protecting a single circuit to high-capacity, multi-shelf HVI preconfigured systems.

Positron also provides a wide range of consulting, analysis and training services for communications companies and electrical utilities.

Full details and contact information are available at: www.PositronPower.com

1.4 Service and Support

1.4.1 Positron Contact Information

General information:	Positron Inc. 5101 Buchan Street, Suite 220 Montreal, Quebec, Canada H4P 2R9 US and Canada: 1-888-577-5254 International: 1-514-345-2220 Fax: 514-345-2271 E-mail: info@positronpower.com Website: www.positronpower.com
Customer Service and Repairs:	US and Canada: 1-888-577-5254 International: 1-514-345-2220 E-mail: customerservice@positronpower.com

1.4.2 Technical Customer Support

Positron is committed to providing excellent ongoing technical support to its customers. A team of specialists is always available for telephone consultations or for on-site visits to assist in the maintenance and troubleshooting of Positron equipment. For pricing information or assistance in the planning, configuration and implementation of the installation of equipment, contact Technical Customer Service.

1.4.3 Customer Training

Full customer training courses on High Voltage Interface (HVI) are also available. For more information, contact Positron.

1.4.4 Repair Service

All warranty repairs are performed at no cost. Positron reserves the right to repair or replace any equipment that has been found to be defective.

For information about out-of-warranty repairs, contact Positron's Repair Department. Due to the varied nature of repairs, no specific turnaround can be guaranteed, but average turnaround time is 20 working days from date of receipt. In emergency situations, special arrangements can be made. All repaired items are warranted for a period of 90 days.

Before returning any items to Positron for repair, warranty repair or replacement, call the Repair department to obtain a Return Material Authorization (RMA) number. Parts returned without RMA numbers cannot be accepted. The RMA number must always be clearly marked on all boxes, crates, and shipping documents. Bulk repairs (more than five items) will require additional processing time, so please take this into consideration when requesting an RMA number.

To accelerate the repair process, whenever possible, include a report detailing the reason for return with the unit(s). Also, please include the name and phone number of a person who can be contacted should our Repair department need further information.

When packing items being returned for repair, please ensure they are properly packed to avoid further damage. Plug-in cards should never be shipped while installed in a shelf; this will cause damage that can extend the repair period.

1.5 Teleline Warranty

Subject to the provisions of this paragraph, Positron warrants that the equipment shall perform in accordance with Positron's specifications. The warranty remains valid for five (5) years from the date of shipment. The warranty fully covers workmanship, materials and labor. Positron shall, at its sole discretion, repair or replace the problem unit.

Freight costs to ship defective equipment to Positron are borne by the Customer, with return of replaced or repaired equipment to be at Positron's expense.

1.5.1 Limitation of Liability

Subject to anything to the contrary contained herein, Positron's sole obligation and liability and the customer's sole remedy for Positron's negligence, breach of warranty, breach of contract or for any other liability in any way connected with or arising out of, the equipment or any services performed by Positron shall be as follows:

- In all situations involving performance or non-performance of the equipment or any component thereof, the customer's sole remedy shall be, at Positron's option, the repair or replacement of the equipment or said component.
- For any other claim in any other way related to the subject matter of any order under, the customer shall be entitled to recover actual and direct damages; provided that Positron's liability for damages for any cause whatsoever, and regardless of the form of the action, whether in contract or in tort (including negligence), shall be limited to the value of the order.

Positron shall not be obligated to repair or replace any item of the equipment which has been repaired by others, abused or improperly handled, improperly stored, altered or used with third party material or equipment, which material, or equipment may be defective, of poor quality or incompatible with the equipment supplied by Positron, and Positron shall not be obligated to repair or replace any component of the equipment which has not been installed according to Positron specifications.

IN NO EVENT SHALL POSITRON BE LIABLE FOR ANY INDIRECT, INCIDENTAL, SPECIAL, CONSEQUENTIAL, PUNITIVE, EXEMPLARY OR SIMILAR OR ADDITIONAL DAMAGES INCURRED OR SUFFERED INCLUDING

LOSS OF PROFITS, LOSS OF REVENUES, LOSS OF DATA, LOSS OF BUSINESS INFORMATION, LOSS OF GOODWILL, LOSS OF EXPECTED SAVINGS OR BUSINESS INTERRUPTION ARISING OUT OF OR IN CONNECTION WITH THE EQUIPMENT, A PURCHASE ORDER, SUPPLIES, MAINTENANCE SERVICES OR OTHER SERVICES FURNISHED HEREUNDER, EVEN IF POSITRON HAS BEEN ADVISED OR IS AWARE OF THE POSSIBILITY OF SUCH DAMAGES.

EXCEPT AS EXPRESSLY SET FORTH IN THIS AGREEMENT, POSITRON DISCLAIMS ANY FURTHER CONDITIONS, REPRESENTATIONS OR WARRANTIES, WHETHER WRITTEN OR ORAL, EXPRESSED OR IMPLIED, INCLUDING THE CONDITIONS AND WARRANTIES OF MERCHANTABILITY, MERCHANTABLE QUALITY, FITNESS FOR A PARTICULAR PURPOSE, TITLE, PERFORMANCE AND THOSE ARISING FROM STATUTE, TO THE EXTENT PERMITTED BY LAW. POSITRON DOES NOT WARRANT THAT THE SYSTEM WILL OPERATE WITHOUT INTERRUPTION OR THAT IT WILL BE ERROR FREE.

1.5.2 Cancellation and Rescheduling Charges

Should the customer cancel, prior to shipment, any part of an order, the customer agrees to pay to Positron cancellation charges, not as a penalty, which shall total all expenses, including labor expenses, incurred by Positron prior to said cancellation. Equipment that has been specially developed for the customer's specific applications shall not be subject to cancellation. Cancellation or rescheduling is not permissible after shipment of the System.

Chapter 2

Overview

2.1 Introduction

The 5-card Shelf CCC model 751112/15, is used indoors or outdoors in a controlled environment to accommodate five service cards. The shelf is molded from specially treated polyurethane, making it a lightweight, flame retardant product of high dielectric strength. Its polyurethane body limits the possibility of many kinds of infiltration while providing reliable isolation from external ground potentials.

The shelf is equipped with the connectors for any of the plug-in cards from the Teleline line of products. The shelf has a separate area to accommodate a Power Supply Card model 751313MC (120 Vac/130 Vdc to -24 Vdc), 751318MC (120 Vac/130 Vdc to -48 Vdc), 751319MC (floating 48 Vdc to -48 Vdc) or 751316 (floating 48 Vdc to -24 Vdc), and a Battery Backup Card, model 751312 to provide -24 Vdc uninterruptible power supply (UPS). If the Battery Backup is not used, then two Power Supply Cards may be installed for redundancy or to have -24 Vdc and -48 Vdc.

The shelf is shipped with a Station cable stub for connection to communications equipment, a Polyethylene Insulated Cable (PIC) stub for connection to the Central Office (CO) incoming cable, and a power cable.

The CCC (Color Coding Convention) designation represents the implementation of the telecommunication industry's conventional color coding for Four-Wire Equipment Termination Sequence cable connections as shown in Table 2 on page 17.

The shelf's features include the following:

- The Station and CO cables connect to the shelf via individual printed circuit boards.
- Each of the card slots can accommodate two Tip and Ring pairs for four-wire AC data applications, four-wire T1 applications, HDSL and ADSL applications.
- The Station and CO cables are pre-wired to male connectors for insertion into the female receptacles mounted on the printed circuit boards inside the shelf. Two power cables are provided with the shelf. One has a three-prong plug and is used to supply 120Vac to the shelf when an internal power supply card is used. The second does not have a plug and is used when powering the shelf from a DC source (48 Vdc or 130 Vdc).

- The shelf has been successfully tested for the UL standard (94V0) for flame retardance.
- The unit is lightweight and easy to install. The weight of the shelf with the motherboards is 9 kg (20 lbs).
- The enclosure resists the infiltration of dust, mist, and water from sprinklers.
- When equipped with a Plug-in Power Supply 751313MC (-24 Vdc), 751318MC (-48 Vdc), 751319MC (-48 Vdc) or 751316 (-24 Vdc), the shelf can provide power to Station equipment through the Station cable.
- The CO and Station backplanes of the shelf provide increased crosstalk immunity, better impedance matching for high-speed circuits (135 Ω) and better current-carrying capacity, for CSA/CAN 60950-1.
- Alarm on power failure when using a 751313MC, 751318MC or 751319MC power supply.

2.2 Physical Specifications

For a listing of the module's physical specifications, refer to Table 1.

Table 1: Physical Specifications for 5-card Shelf CCC model 751112/15

Parameter	Specification
Height	34.3 cm (13.5")
Width	54.6 cm (21.5")
Depth	24.7 cm (9.7")
Weight	9 kg (20 lbs)

Figure 1: 5-card Shelf CCC model 751112/15

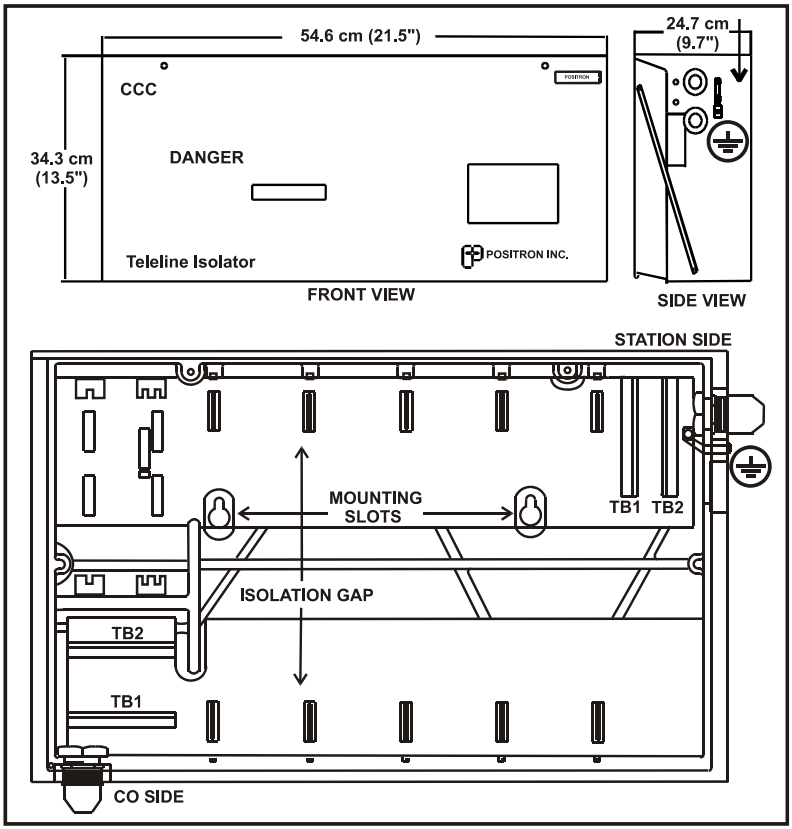

2.3 Cable Options

The shelf is equipped with CO and Station color coded cable stubs.

- 3 meter (10’) CO and Station color coded cable stubs are provided with the shelf. For a listing of the cable color coding for the CO and the Station sides, refer to Table 2 on page 17.
- Station and CO cables also available in lengths of 6 meters (20’), 9 meters (30’), 12 meters (40’) or 15 meters (50’). Contact Positron for more information.

Table 2: Color Coding - CO and Station Cables

		CO Cable			Station Cable		
Slot #	Pair #	Wire Color	Label Designation	To Connector	Wire Color	Label Designation	To Connector
1	1	WHITE BLUE	T1 R1	TB1-17 TB2-17	WHITE/BLUE BLUE/WHITE	T1 R1	TB1-18 TB2-18
	2	WHITE ORANGE	TA RA	TB1-2 TB2-2	WHITE/ORANGE ORANGE/WHITE	TA RA	TB1-3 TB2-3
2	3	WHITE GREEN	T2 R2	TB1-16 TB2-16	WHITE/GREEN GREEN/WHITE	T2 R2	TB1-17 TB2-17
	4	WHITE BROWN	TB RB	TB1-3 TB2-3	WHITE/BROWN BROWN/WHITE	TB RB	TB1-4 TB2-4
3	5	WHITE SLATE	T3 R3	TB1-15 TB2-15	WHITE/SLATE SLATE/WHITE	T3 R3	TB1-16 TB2-16
	6	RED BLUE	TC RC	TB1-4 TB2-4	RED/BLUE BLUE/RED	TC RC	TB1-5 TB2-5
4	7	RED ORANGE	T4 R4	TB1-14 TB2-14	RED/ORANGE ORANGE/RED	T4 R4	TB1-15 TB2-15
	8	RED GREEN	TD RD	TB1-5 TB2-5	RED/GREEN GREEN/RED	TD RD	TB1-6 TB2-6
5	9	RED BROWN	T5 R5	TB1-13 TB2-13	RED/BROWN BROWN/RED	T5 R5	TB1-14 TB2-14
	10	RED SLATE	TE RE	TB1-6 TB2-6	RED/SLATE SLATE/RED	TE RE	TB1-7 TB2-7
	11	BLACK BLUE			BLACK/BLUE BLUE/BLACK		
	12	BLACK ORANGE			BLACK/ORANGE ORANGE/BLACK		
	13	BLACK GREEN			BLACK/GREEN GREEN/BLACK		
	14	BLACK BROWN			BLACK/BROWN BROWN/BLACK		
	15	BLACK SLATE			BLACK/SLATE SLATE/BLACK		
	16	YELLOW BLUE			YELLOW/BLUE BLUE/YELLOW		

Continued. *Continued...*

Table 3: Color Coding - CO and Station Cables (Continued)

	CO Cable			Station Cable		
Pair #	Wire Color	Label Designation	To Connector	Wire Color	Label Designation	To Connector
17	YELLOW			YELLOW/ORANGE		
	ORANGE			ORANGE/YELLOW		
18	YELLOW			YELLOW/GREEN	**GND**	**TB1-2**
	GREEN			GREEN/YELLOW	**GND**	**TB1-2**
19	YELLOW			YELLOW/BROWN		
	BROWN			BROWN/YELLOW		
20	YELLOW			YELLOW/SLATE	**-24 Vdc**	**TB2-1**
	SLATE			SLATE/YELLOW	**-24 Vdc**	**TB2-1**
21	VIOLET			VIOLET/BLUE		
	BLUE			BLUE/VIOLET		
22	VIOLET			VIOLET/ORANGE	**-48 Vdc**	**TB2-2**
	ORANGE			ORANGE/VIOLET	**-48 Vdc**	**TB2-2**
23	VIOLET			VIOLET/GREEN		
	GREEN			GREEN/VIOLET		
24	VIOLET			VIOLET/BROWN	**AUX PWR**	**TB1-1**
	BROWN			BROWN/VIOLET	**AUX PWR**	**TB1-1**
25	VIOLET	**RMT GND**	**TB1-1**	VIOLET/SLATE	PWR ALRM 1 (NO)	J18-1
	SLATE	**RMT GND**	**TB2-1**	SLATE/VIOLET	PWR ALRM 2 (NO)	J18-2

Chapter 3

Installation

3.1 Installing the 5-card Shelf on a Wall

Installations should conform to local practices and IEEE Std 487-2007 - IEEE Recommended Practice for the Protection of Wire-Line Communication Facilities Serving Electric Supply Locations.

CAUTION

- The equipment must be installed in a restricted area.

ESD Precaution

INCORRECT HANDLING MAY VOID WARRANTY

These procedures must be followed when handling an electrostatic sensitive device.

- A grounded wrist strap must be worn at all times during installation.
- When unpacking, place the antistatic bag containing the device on an electrostatic discharge (ESD) safe surface. An ESD safe surface is a conductive surface connected directly to an earth ground.
- When moving, carry the device in an ESD safe container or the antistatic bag, provided with the device.

3.2 Shelf Mounting

The 5-card Shelf CCC model 751112/15 should be installed as closely as possible to the point of entry of the CO cable.
Power will need to be routed to the shelf (-48 Vdc, 130 Vdc or 120 Vac).
A solid Station ground must be available, connected to the Station ground grid.

CAUTION

- To increase system reliability and availability, a Non-Fragmenting Lightning Arrestor Unit (model 751126) is also highly recommended.
- Stand on a thick rubber mat and wear rubber gloves during the installation procedures. It is preferable to perform these procedures on a clear dry day when a Ground Potential Rise (GPR) or transients are less likely to occur.
- It is strictly forbidden to install any additional hardware inside the shelf or to drill any holes in its surface. Doing so would greatly compromise safety and isolation, and would void the warranty.
- The Teleline shelf, together with the Teleline Modules and Teleline Plug-in power Supplies is certified to CSA CAN/CSA-C22.2 No. 60950-1. Installing modules or power supplies other than Teleline voids 60950 certification and Positron's warranty

➤ **To install the 5-card Shelf CCC model 751112/15:**

1. Verify that you have the following customer-provided tools and hardware required to install the shelf:
   - Center punch
   - Electric drill with a 5/32" diameter bit
   - 7/16" hex wrench
   - 1/8" common blade screw drivers
   - 1" x 4' x 8' plywood sheet and appropriate mounting hardware
   - Cable clamps, tie wraps, and mounting hardware for routing cables exterior to the shelf (quantity determined by the cable lengths involved).
2. Unpack the shelf and its hardware from its protective box.

3. Verify the contents of the shelf kit. For a listing of the items included in the kit, refer to Table 3 on page 23.
4. To mount the shelf, install the plywood backboard on the wall to provide the installation with additional isolation from Station ground.
5. Attach the drilling template to the plywood surface where the shelf will be located. As indicated on the template, drill two holes for the #14 screws supplied.
6. Remove the template and partially install the #14 screws leaving a gap of approximately 2 cm (3/4”).
7. Open the cover of the shelf by removing the two wing nuts on the shelf cover.
8. Locate the shelf over the #14 screws using the two shelf keyholes.
9. Tighten the #14 screws. It is unnecessary to further isolate the screws from Station ground.

Table 3: 5-card Shelf CCC model 751112/15 Kit Contents

Items Included	Qty	Part No. Found on Item
Five-card Shelf	1	244W000041-401
Description and Installation document	1	925W751022-01E (this document)
CO side PIC cable 3 m (10’)	1	237W000004-401
Station side cable 3 m (10’)	1	237W000005-401
Five-card Shelf accessory kit:	1	241-010102-401
AC Power Supply cable	1	207-990000-093
DC Power Supply Cable	1	207W000007-001
Drilling template	1	220-000100-201
Connector, cord grip, hub, 3/4”	1	230-990400-025
Connector, cord grip, hub, 1/2”	2	230-990400-036
Instruction sheet for strain relief	1	241-010006-001
Instruction sheet for CO side PIC cable	1	241-010008-001
Instruction sheet for Station side cable	1	241-010009-001
Cap rod	1	550-010031-001
Cable fastener, 0.75”	3	706-990000-010
Hex nut, 3/4”- 14NPT	1	714-990000-003
Hex nut, 1/2”- 14NPT	2	714-990000-005
Wing nut, 10-32 THD	2	714-990000-040
Hex screw with washer #14A	2	724-990000-026
Holder, Retainer	2	598-040001-001

3.3 Ground Connections

➤To connect the ground of the 5-card Shelf CCC model 751112/15

CAUTION

- The equipment ground must be connected before any other connection is made to the shelf.
- Connect the Station ground lug to the Station ground bar or ground rod using a #6 AWG wire - green with yellow stripes. The preferred length of this wire is 3 meters (10 feet) or less. The ground lug is the recommended method of grounding the shelf.
- If a ground bar or ground rod is not available to connect the ground lug, it is possible to use the power cord ground wire. Refer to step 3. on page 27.

NOTE

- All shelves must be permanently connected to earth.
- The ground wire must be AWG #6, color green with a yellow stripe.
- Installations must conform to local electrical code.

For an illustration of the shelf power access, refer to Figure 2 on page 26.

CAUTION

- HIGH LEAKAGE CURRENT: Earth connection is essential before making telecommunication network connections.

To ensure the safety of personnel, Positron recommends following these guidelines:

- If the return of the DC supply is grounded, it must be grounded at the source.
- The field wiring should include a readily-accessible disconnect device. The disconnect device shall disconnect both poles of the power input.
- When the DC supply system is grounded, this equipment is connected directly to the DC supply system earthing electrode conductor or to a bonding jumper from an earthing terminal bar or bus to which the DC supply system earthing electrode is connected.
- This equipment must be located in the same immediate area as any other equipment that has a connection between the earthed conductor of the same DC supply circuit and the earthing conductor, and also the point of earthing of the DC system. The DC system shall not be earthed elsewhere.
- The DC supply source must be located within the same premises as this equipment.
- There shall be no switching or disconnecting devices in the earthed circuit conductor between the DC source and the point of connection of the earthing electrode conductor.

Figure 2: Shelf Ground Connections: Side View

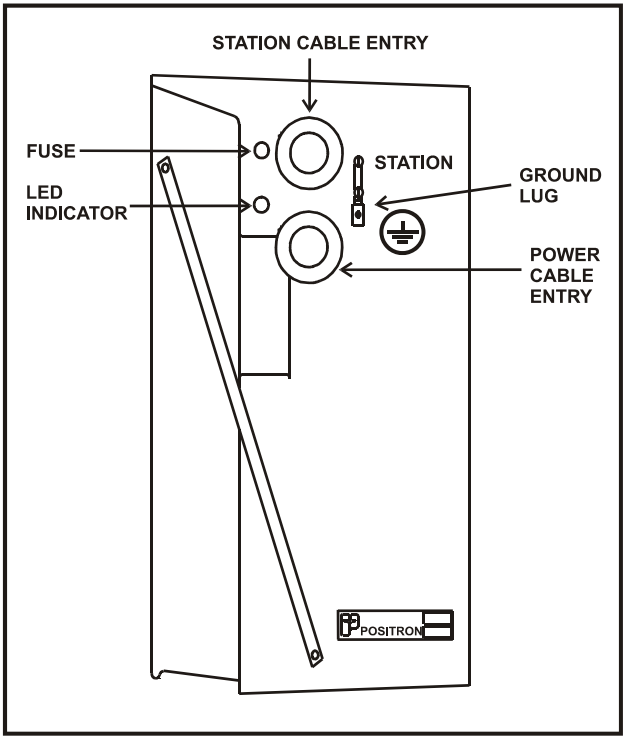

The LED indicates the presence of -24 Vdc or -48 Vdc in the shelf, regardless of the source from an external or an internal power supply. The 5 A, 125 Vac, fast-blow, replaceable fuse protects the internal power supply (if installed) from excessive currents or overvoltage.

When powered through an external source, the requirements are:

- -24 Vdc: -21 Vdc to -27 Vdc, 3A
- -48 Vdc: -42 Vdc to -54 Vdc, 2A
- 130 Vdc: 113 Vdc to 145 Vdc, 1A

When using one or more external power supplies, all power outputs (including returns) MUST have disconnect devices rated at 3A.

3.3.1 Powering model 751313MC or 751318MC from an AC Source

CAUTION

- Teleline Plug-in Power Supplies are CSA approved. No other power supply can be used inside a Teleline shelf.
- The shelf ground lug is the preferred way to ground the shelf.
- The 751313MC and 751318MC input is protected through the power cord ground wire, but since the ground lug provides better current carrying capacity, it is the preferred way of grounding the shelf. The jumper W1 is used to either connect the station backplane ground to the power cord ground (CONNECTED) or not (DISCONNECTED). If the ground lug is connected to a solid station ground and W1 is in the “CONNECTED” position, a ground loop could result and electrical “hum” could be present on the circuit cards. Therefore, when using the ground lug, do not connect a ground to TB3-2 and put W1 in the “CONNECTED” position. If local electrical code states that you must connect the power cord ground, then do so but you must put W1 in the “DISCONNECTED” position.

If a Power Supply Card, model 751313MC or 751318MC is used and is powered from an AC source, the following instructions apply:

1. The preferred way of grounding the shelf is to connect a solid ground to the shelf ground lug, not connecting a ground to TB3-2 and setting W1 to “CONNECTED” position.
2. If the Station ground lug is used and you are forced to connect the power cord ground to TB3-2, the ground strap W1 on the Station side motherboard must be in the “DISCONNECTED” position. This will prevent creating a ground loop.
3. If a local Station ground is not available and grounding is done through the power cord ground wire (TB3-2), then ground strap W1 must be in its “CONNECTED” position. Doing this will connect the station backplane ground to the power cord ground wire.

For an illustration of the ground strap settings, refer to Figure 3 on page 28.

Figure 3: 5-card Shelf CCC model 751112/15 Ground Strap Settings

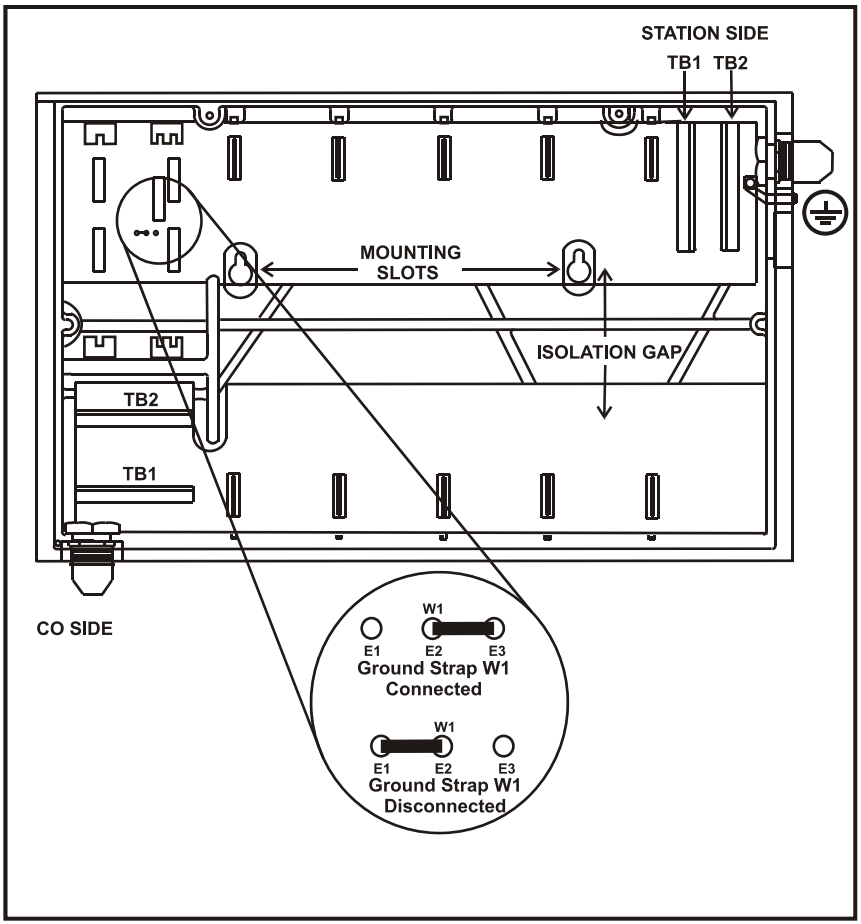

3.4 Cable Connections

For an illustration of the cable connections to a Teleline shelf, refer to Figure 4.

CAUTION

- The CO cable should be kept at least 15 cm (6”) apart from the Station cable, the ground wire and any Station equipment in order to prevent an electric fault between the two in the event of a GPR.

Figure 4: Shelf, CO and Station Cable Separation

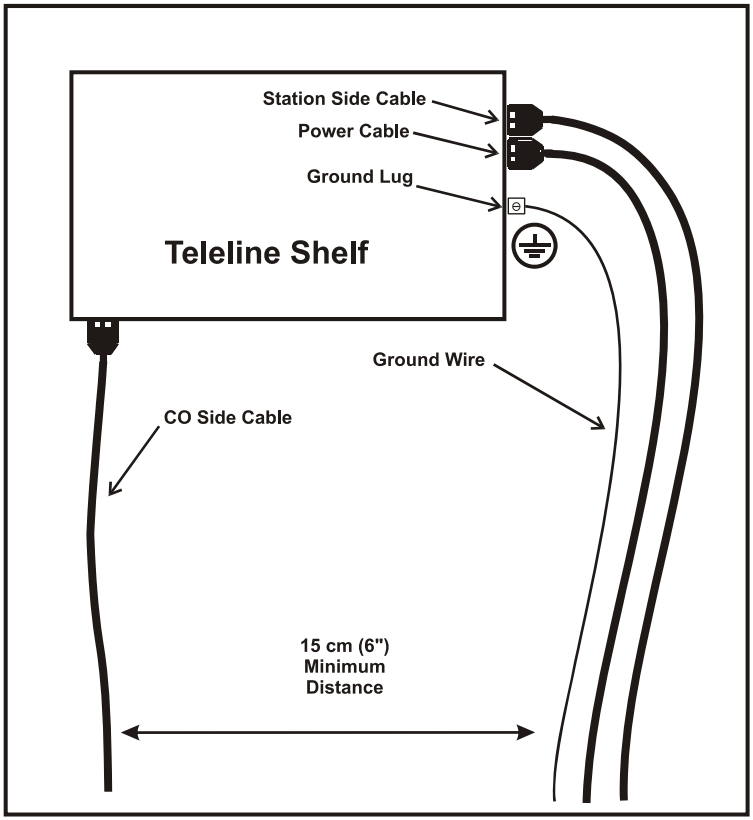

3.4.1 Station Side Cable Connections

➤ **To install the Station side cable connections:**

CAUTION

- The shelf ground lug must be connected before any other connection is made.

1. Slide the free end of the Station cable through the nut of one of the 1/2” strain reliefs provided.
2. Feed the free end of the cable through the upper hole on the upper right-hand side of the shelf, from the inside to the outside.
3. Plug the male 18-pin connectors into the female receptacles TB1 and TB2. Then plug the small 2-pin connector P18 into the male connector J18. Pass the cable of J18 under the cable clamp shown in Figure 5 on page 31 (item 68). J18 is used to provide a contact closure in case of a failure of the internal power sources. For a diagram of the Station side terminal block and connector, refer to Figure 5 on page 31.
4. Take the remainder of the strain relief (gland nut, chuck, neoprene bushing, and body and slide it up the cable from the free end outside the shelf to the shelf opening. Secure the cable by holding the nut inside the shelf and tightening the grip by turning the gland nut.

CAUTION

- The cable wires should be tightly bundled together inside the shelf to minimize the chance of a broken wire touching an adjacent plug-in card, or from sagging into the isolation gap between the Station and CO side motherboards.

5. Connections between the Station cable and the site equipment cables can now be made according to the color coding.

   For a listing of the color codes, refer to Table 2 on page 17.

   For a view of Station side motherboard interconnections, refer to Figure 6 on page 32.

Figure 5: Station Side Terminal Blocks

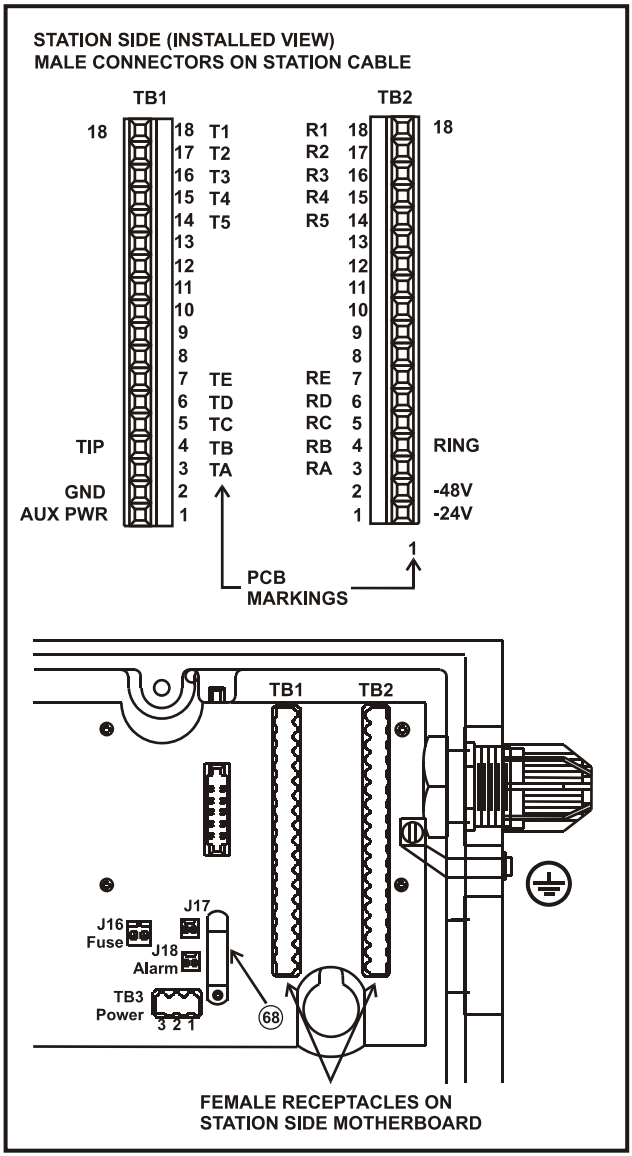

Figure 6: Station Side Motherboard Interconnection Diagram

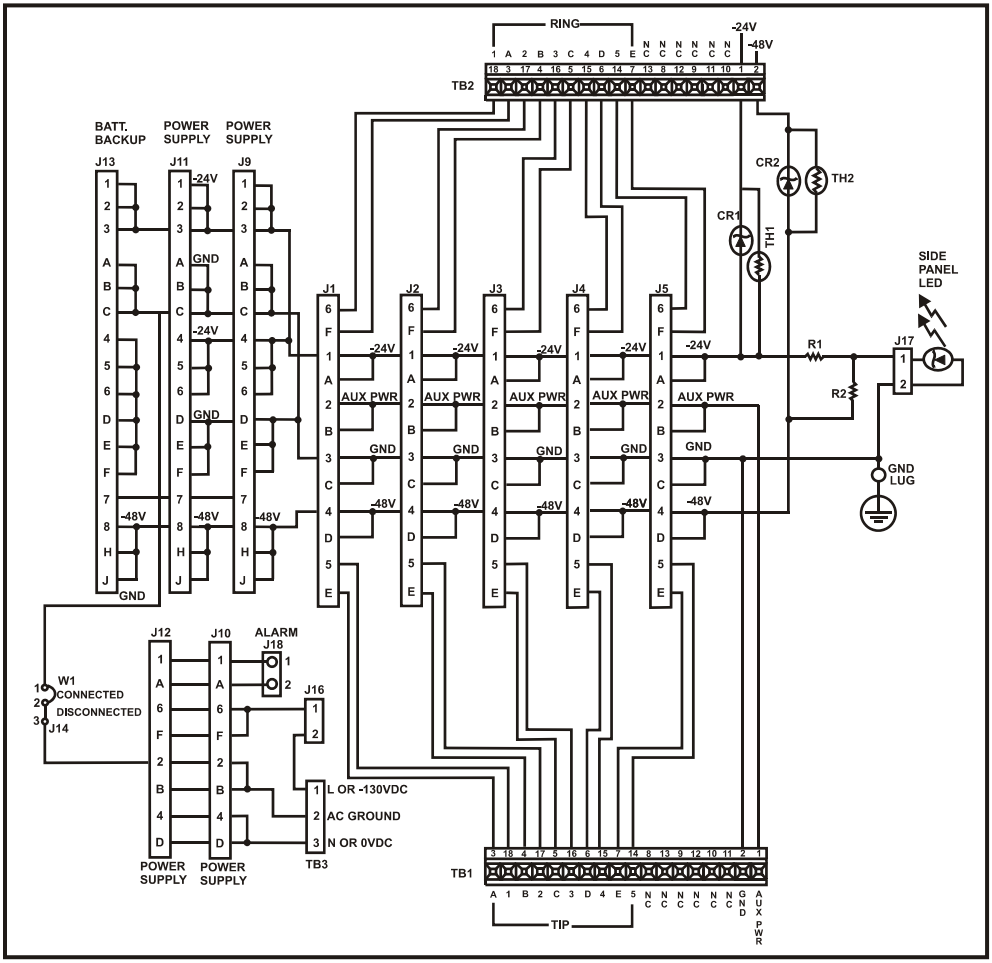

3.4.2 CO Side Polyethylene Insulated Cable (PIC) Connection

➤ **To connect the CO side cable using the PIC stub**

1. Slide the nut of the 3/4” strain relief supplied up the cable from the free end of the stub.
2. From the inside of the shelf, pass the free end of the cable through the bottom left-hand side.
3. Plug the male connectors into female receptacles TB1 and TB2, mounted in the bottom left-hand corner of the shelf. For a diagram of the CO side terminal blocks, refer to Figure 7 on page 34.
4. Take the remainder of the strain relief (the gland nut, chuck, neoprene bushing, and body), and slide it onto the cable from the free end, outside the shelf, to the shelf opening. Secure the cable by holding the nut inside the shelf and tightening the grip by turning the gland nut.
5. Connections between the PIC stub and the incoming CO cable can now be made according to the color coding of the CO cable.

For a listing of the color codes, refer to Table 2 on page 17.

For a view of CO side motherboard interconnections, refer to Figure 8 on page 35.

The PIC stub must be spliced to the incoming CO cable using a high-dielectric splice case. All interconnections should be completely isolated from anything that is, or could eventually become, referenced to Station ground.

DANGER

- The sheath of the CO cable must not be connected to Station ground. The wires themselves should be tightly bundled together inside the shelf using tie wraps, as shown for the PIC cable in instruction sheet 241-010008-001 Rev 2. This is to minimize the chance of a broken wire touching an adjacent plug-in card.

Figure 7: CO Side Terminal Blocks

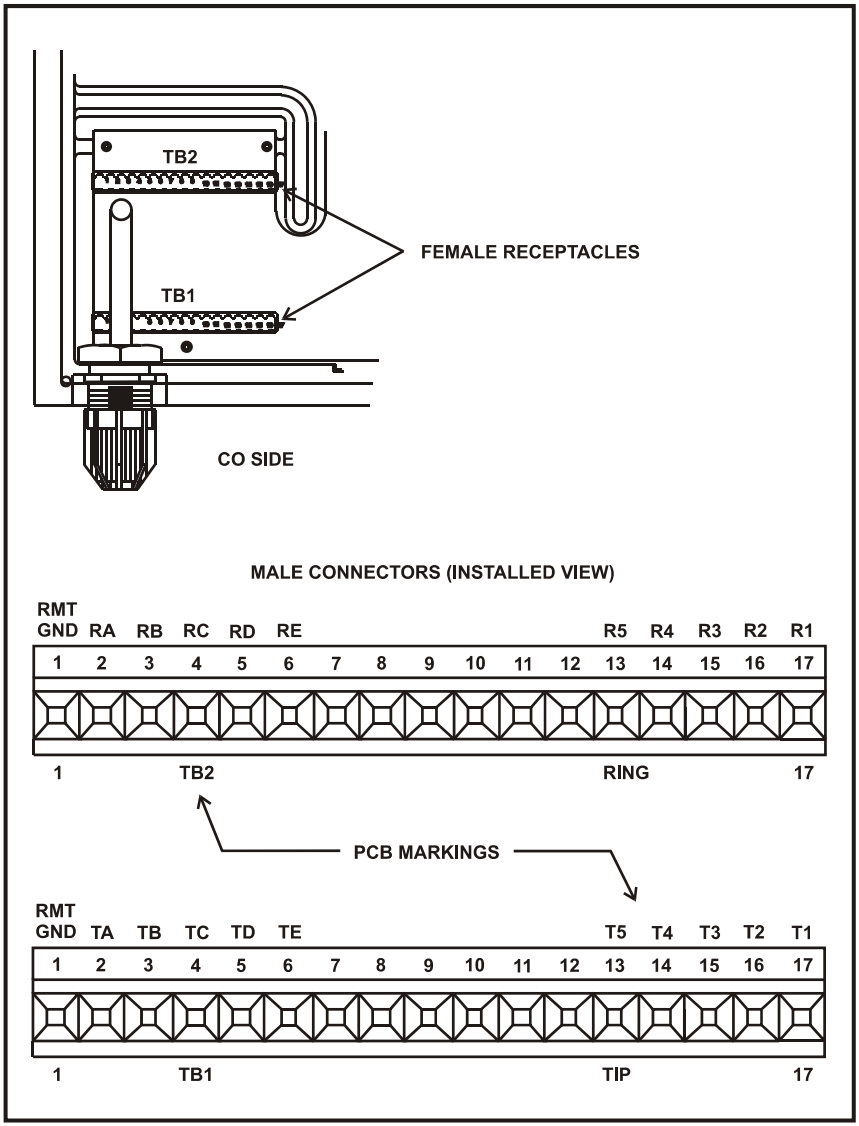

Figure 8: CO Side Motherboard Interconnection Diagram

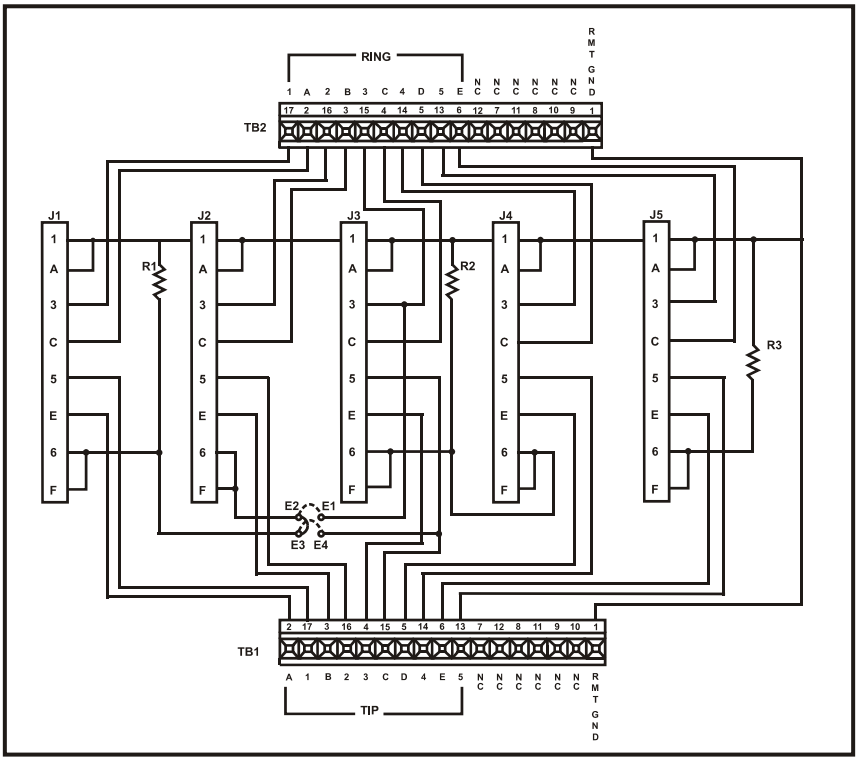

3.5 Power Connections

The power for the shelf may be connected using either an external power supply or an internal power supply. These two different options are described below.

CAUTION

- External power sources and /or primary sources (120 Vac / 130 Vdc / -48 Vdc) must be fed through disconnect devices rated at 3A. Both the line and the return leads must have disconnect devices.
- When using an external power supply, make sure the equipment is UL / CSA certified before connecting it to the shelf. No equipment other than Positron can be used in a Teleline shelf. Doing so would greatly compromise isolation, safety of the CSA product and void the warranty.

3.5.1 External Power Supply

When connecting power to the shelf using an external power supply, there are two methods, as listed below.

➤ To power the shelf via the Station cable

The shelf may be powered via the Station cable by an external -24 Vdc or -48 Vdc supply, or by 130 Vdc using the AUX PWR line. The unused strain relief should be blocked. For an illustration of this type of external powering, refer to Figure 10 on page 43.

1. Make the cable connections. For a list of the standard color codes for Station side cables, refer to Table 4 below.

Table 4: Five-card Shelf CCC model 751112/15, Powering Via Station Side Cable:

Label	Description	Connector Position	25-Pair Cable
GND	Ground	TB1-2	Yellow/Green
GND	Ground	TB1-2	Green/Yellow
AUX PWR	Auxiliary Power	TB1-1	Violet/Brown
AUX PWR	Auxiliary Power	TB1-1	Brown/Violet
-24 Vdc	-24 Vdc Supply	TB2-1	Yellow/Slate
-24 Vdc	-24 Vdc Supply	TB2-1	Slate/Yellow
-48 Vdc	-48 Vdc Supply	TB2-2	Violet/Orange
-48 Vdc	-48 Vdc Supply	TB2-2	Orange/Violet
Note: For floating 130 Vdc, connect the positive lead to TB1-1 and the negative lead to TB2-2.			

NOTE

- If an external DC supply is not available, a Power Supply Card (models 751313MC, 751318MC, 751319MC or 751316) will be needed. To connect the power cable, refer to Section 3.6 on page 40.
- If an external DC supply is available, and you have decided to add an internal power supply, you must first disconnect the -24 Vdc and/or -48 Vdc input to TB2. You need to do this because this input is on the same bus as the power supply output and it will load the Power Supply Card down. Then connect the power cable provided to TB3. The Power Supply Card itself can only be powered via TB3, refer to Figure 3.6 on page 40.

➤ To power the shelf via the power cable

The shelf may be powered via the DC power cable supplied in the kit (the one without a plug). In this case feed the power cable through the lower hole on the Station side and connect it directly to TB1 and TB2. Make sure the correct wire colors are used.

For an illustration of this type of external powering, refer to Table 6 on page 43 and Figure 9 on page 39.

NOTE

- When using the DC cable to power the shelf directly to TB1 and TB2, the grounding of the shelf MUST BE done through the ground lug on the side of the shelf because the ground wire and 0 V wire will not fit in the same terminal block pin. Therefore cut off the green wire on the cable.

1. Make the cable connections. For a list of the connector positions when using a power cable, refer to Table 5 below.

Table 5: Powering the 5-card Shelf CCC model 751112/15 via Power Cable:

Description	Connector Position	DC Cable Wire Color
Ground (positive or 0 V)	TB1-2	Black
Auxiliary Power (negative)	TB1-1	White
-24 Vdc input	TB2-1	White
-48 Vdc input	TB2-2	White
Note: For floating 130 Vdc, connect the live or positive wire (White) to TB1-1 and the return or negative wire (Black) to TB2-2.		

Figure 9: External Power Supply

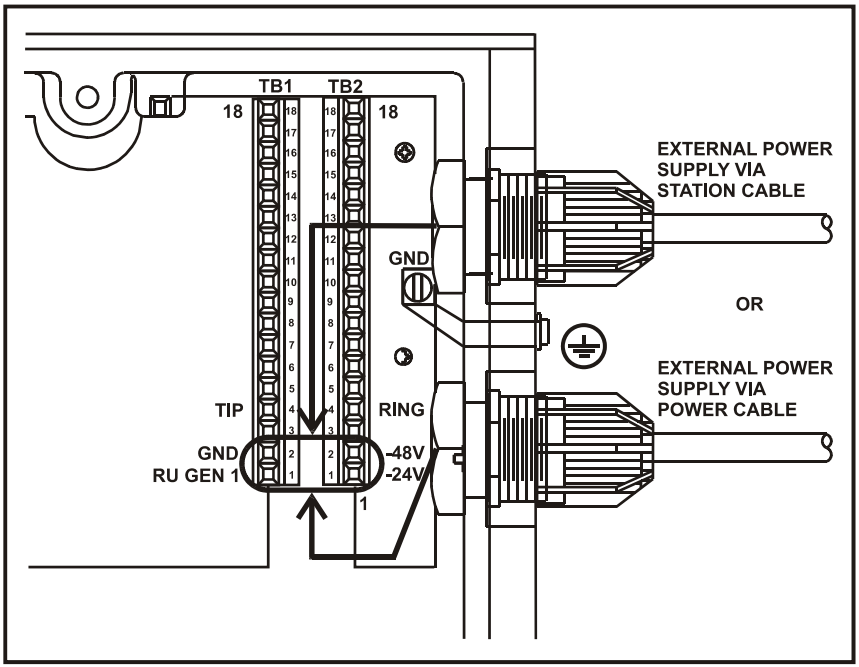

3.6 Internal Power Supply

When an internal Power Supply Card, model 751313MC or 751318MC is used, then either 120 Vac or 130 Vdc must be supplied to the shelf via one of the power cables provided. The Power Supply Card itself operates from either AC or DC. In this case, it is very important that the jumper W1 be installed properly. Please refer to section 3.3 on page 24 and section 3.3.1 on page 27 for an explanation of the jumper.

When an internal Power Supply Card, model 751316 or 751319MC is used, the DC power cable supplied must be used to supply the 48V to TB3 (the power supply does not use -48 Vdc from TB2).

3.6.1 Internal Power Supplies Configurations

When using the internal power supplies, multiple configurations can be used depending on the installation and reliability desired.

1. Where reliability and down time are not a concern or shelf circuits are not critical, a single Power Supply can be used.

   If powered from 48 V station batteries a 751316 will be used to provide -24 Vdc to the shelf or a 751319MC to provide -48 Vdc to the shelf.

   If powered from 120 Vac or 130 Vdc, then a 751313MC or 751318MC will be used depending on the cards to be powered.

   If no battery backup is required (when running off 130 V batteries), then a 751318MC is recommended to provide -48 Vdc to the cards.

   For installations that have a mix of cards that operate from both voltages, either a 751313MC and 751318MC or a 751316 and a 751319MC can be used in the same shelf.

   The alarm circuit from the power supplies can be used to generate an alarm in case of an input power down or a power supply failure.

2. Where reliability is very important or circuits are critical and 48 Vdc or 130 Vdc batteries are available, the shelf should be powered using the station batteries

to provide an uninterruptible power source. In this case two 751316, 751319MC, 751313MC or 751318MC units should be used for redundancy. Both power supplies would share the load and if one of them was to fail, the second would take over the full load. The power supply that failed would generate an alarm even if the system was still running, letting the technician know that a power supply needs servicing or replacement.

3. Where reliability is very important or circuits are critical but there is only 120 Vac available, the shelf should use a 751313MC power supply with a 751312 battery back-up module to provide an uninterruptible power source. In case of a power outage or a power supply failure, the battery back-up module will take over and the power supply will generate an alarm to let the technician know that the system is running on batteries and needs servicing before the batteries are discharged.

NOTE

- The operating temperature of the power supplies is -20ºC (-4 ºF) to +65ºC (+149ºF). The battery back-up, 751312 has an operating range of 0ºC (+32ºF) to 50ºC (+122ºF) and therefore reduces the operating temperature range of the whole installation even if all the other cards can operate on a wider range.

➤ To install the power cable

1. If the power supply runs off 120Vac, use the AC power cable (with the plug) provided in the kit. If running off 130 Vdc or 48Vdc, use the DC power cable (without the plug) provided in the kit.
2. When using the DC power cable, it must be permanently connected to disconnect devices on both leads, rated for 3A each.
3. Slide the remaining 1.3 cm (1/2”) strain relief (gland nut, chuck, neoprene bushing, and body) onto the cable.
4. Feed the free end of the cable through the lower hole on the right-hand side of the shelf, from the outside to the inside. Slide the strain relief nut over the bare end of the cable inside the shelf.
5. Route the power cable inside the shelf.
6. Connect the power cable to the power and to TB3.
   - For an illustration, refer to Figure 10 on page 43.
   - For a list of the 120 Vac power cable connections, refer to Table 6 on page 43. For a list of the 130 Vdc and 48 Vdc power cable connections, refer to Table 7 on page 43.
7. Secure the power cable by holding the nut inside the shelf and tightening the grip by turning the gland nut.

CAUTION

- If the ground lug of the shelf and the power cord ground are connected AND the ground strap is connected, a ground loop may result and cause 60Hz “hum” on the circuits.

DANGER

- If the shelf’s ground lug is not used and the ground strap is disconnected, that will leave the shelf ungrounded and can make the installation hazardous.

NOTE

- Female receptacle TB3 is intended exclusively for the internal power supply option.

Table 6: Power Cable Connections for 120 Vac

Description	Connector Position	Wire Color
Live	TB3-1	Black
Ground	TB3-2	Green
Neutral	TB3-3	White

Table 7: Power Cable Connections for 130 Vdc or 48 Vdc

Description	Connector Position	Wire Color
130 Vdc or 48 Vdc	TB3-1	White
Ground	TB3-2	Green
0 Vdc	TB3-3	Black

Figure 10: Power Cable Connection

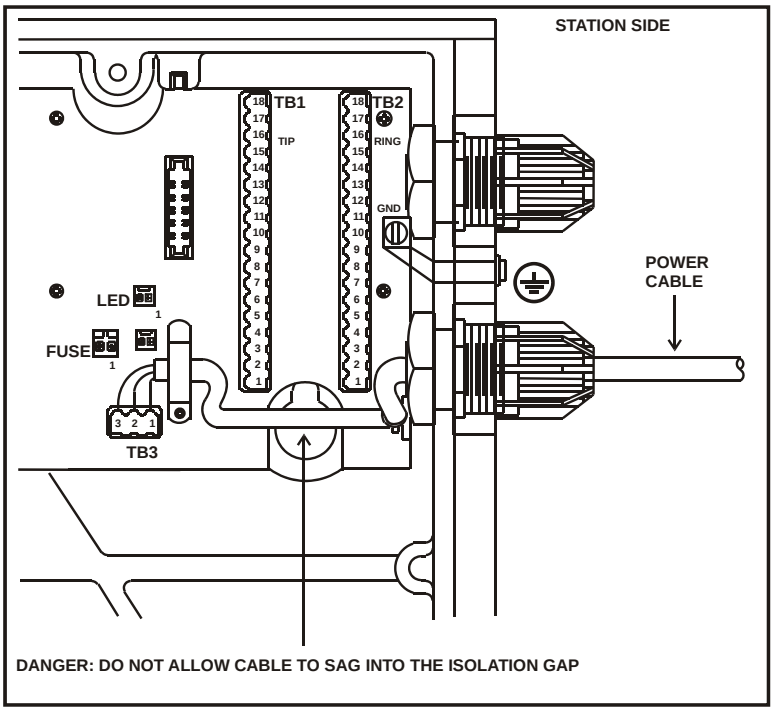

3.7 Power Alarm Contact Features and Specification

The shelf offers the means of monitoring the output of Model 751313MC, 751318MC and 751319MC Plug-in Power Supplies using dry alarm contacts. The wires Violet/Slate and Slate/Violet of the Station cable provide Normally Open (NO) contacts during normal operation. If the output of an internal plug-in power disappears, either through an AC or DC primary source power outage, an input fuse failure, a power supply failure or a power short-circuit in the shelf, the alarm contacts will close to enable a current, AC or DC, to circulate in the alarm circuit.

If the shelf contains a battery backup, the shelf will remain operational and the alarm contact closure can be used to trigger notification of a service requirement. This prevents a service outage by enabling the servicing of the shelf before the batteries discharge.

If the shelf contains two redundant power supplies, one unit would generate an alarm closure to signify loss of output, while the redundant power supply takes over the powering of the shelf. This enables a service call without a service outage.

The alarm contacts are rated for voltages of up to 125 Vac or 30 Vdc and currents up to 150 mA (AC or DC).

There are many applications for use of dry alarm contacts, such as:

- closing a circuit to turn on a 12 Vdc light indicator
- using the contact closure to drive a higher current relay that could turn ON a light bulb or a horn alarm
- closing a circuit to drive a Piezo alarm sounder
- provide contact closure for an input of alarm monitoring/reporting units

This feature is especially useful for installations with critical circuits that cannot tolerate a service outage or where downtime must be minimized.

3.8 Temperature Considerations

The 5-card Shelf CCC model 751112/15 enclosure is made of an insulating material, which under normal operating conditions (i.e., shelf closed) results in a higher temperature internally than externally (room temperature). Therefore, special care must be taken to ensure that the internal temperature never exceeds the operating temperature of each card.

This section provides a procedure for the calculation of the temperature inside the shelf. An example follows the procedure.

For a list of the thermal specifications for Teleline cards designed for use with the shelf, at the time of writing, refer to Table 8 on page 46.

Table 8: Positron Plug-in Card Thermal Specifications

Note	Model	Power Consumption	Power Dissipation	Operating Temperature Range	
1	7501-16B	8.4 W from -24 Vdc	8.5 W	**0° to 50° C**	**32° to 122°F**
1	7501-16C	6 W from -48 Vdc	6 W	**0° to 50° C**	**32° to 122°F**
	7501-24	N/A	N/A	-20° to 65° C	-4° to 149°F
	7501-72	N/A	< 200 mW if loop current is < 80 mA	-20° to 65° C	-4° to 149°F
		N/A	< 5 W if loop current is > 80 mA	-20° to 65° C	-4° to 149°F
1	751312	270 mA (charging)	N/A	**0° to 50° C**	**32° to 122°F**
2	751313MC	N/A	**25% of output power**	-20° to 65° C	-4° to 149°F
2	751318MC	N/A	**25% of output power**	-20° to 65° C	-4° to 149°F
2	751316	N/A	**25% of output power**	-20° to 65° C	-4° to 149°F
2	751319MC	N/A	**25% of output power**	-20° to 65° C	-4° to 149°F
	751322	1.8 W avg at -24 Vdc	1 W at (-24 Vdc)	-20° to 65° C	-4° to 149°F
		2.4 W avg at -48 Vdc	2 W at (-48 Vdc)	-20° to 65° C	-4° to 149°F
	751322 &	2.6 W at -24 Vdc	2 W at (-24 Vdc)	-20° to 65° C	-4° to 149°F
	751322/1	3.6 W at -48 Vdc	3.5 W at (-48 Vdc)	-20° to 65° C	-4° to 149°F
	751322/2	2.6 W at -24 Vdc	2 W at (-24 Vdc)	-20° to 65° C	-4° to 149°F
		3.6 W at -48 Vdc	3.5 W at (-48 Vdc)	-20° to 65° C	-4° to 149°F
	751323	1.7 W avg at -24 Vdc	1 W at (-24 Vdc)	-20° to 65° C	-4° to 149°F
		2.4 W avg at -48 Vdc	2 W at (-48 Vdc)	-20° to 65° C	-4° to 149°F
	751325	1.8 W at -24 Vdc	1 W (-24 Vdc)	-20° to 65° C	-4° to 149°F
		2.4 W at -48 Vdc	2 W (-48 Vdc)	-20° to 65° C	-4° to 149°F
	751329R2	N/A	0.75W	-20° to 65° C	-4° to 149°F
	751329SP	3 W at -48 Vdc	2.5W	-20° to 65° C	-4° to 149°F
	751333A	10.6 W at -24 Vdc	3 W (-24 Vdc)	-20° to 65° C	-4° to 149°F
		11 W at -48 Vdc	3.5 W (-48 Vdc)	-20° to 65° C	-4° to 149°F
	751339R2	N/A	4W	-20° to 65° C	-4° to 149°F
	751339SP	10 W at -48 Vdc	5W	-20° to 65° C	-4° to 149°F
	751340R2	N/A	2W	-20° to 65° C	-4° to 149°F
	751340SP	7 W at -48 Vdc	3W	-20° to 65° C	-4° to 149°F

Note: 1 These cards are designed for indoor applications due to their temperature range

Note: 2 Power Supply Card

➤ To calculate the temperature inside the shelf

1. Photocopy and complete the following worksheet:

Table 9: Temperature Calculation Worksheet

Slot No.	Model	Power Consumption	Power Dissipation	Max. Operating Temperature
1				
2				
3				
4				
5				
-24 Vdc Internal Power Supply			25% of Total power consumption at 24 Vdc =	
-48 Vdc Internal Power Supply			25% of Total power consumption at 48 Vdc =	
		Total power consumption =	Total power dissipation =	Highest allowable temperature =
Temperature inside the shelf =(total power dissipation x shelf thermal resistance) + room temp.				

2. Add the power consumption of all cards powered by -24 Vdc. This value represents the “Total Power Consumption” at -24 Vdc. This value is required for the calculation of the power dissipation of the internal power supply.

NOTE

- If an external power supply is being used, omit this step.

3. Add the power consumption of all cards powered by -48 Vdc. This value represents the “Total Power Consumption” at -48 Vdc. This value is required for the calculation of the power dissipation of the internal power supply.

NOTE

- If an external power supply is being used, omit this step.

4. Add the power dissipation of all cards. This value represents the “Total Power Dissipation.”
5. The “Maximum Operating Temperature” of a card represents the highest temperature at which a card is guaranteed to operate within specifications. At the bottom of the maximum operating temperature column, enter the lowest of the maximum operating temperatures. This temperature is referred to as the “Highest Allowable Temperature.”
6. The temperature inside the shelf is calculated using the following equation.
7. Temperature inside the shelf = (Total Power Dissipation x Shelf Thermal Resistance) + Room Temperature
8. Shelf Thermal Resistance = 0.41° C/W (0.74°F/W)
9. Compare the “Calculated temperature inside the shelf” with the “Highest Allowable Temperature.” The “Temperature inside the shelf” should not exceed the “Highest Allowable Temperature.”

➤ **To reduce the temperature inside the shelf:**

1. Reduce the number of cards in the shelf by distributing the cards among other available shelves.
2. Move the cards between shelves to replace a card that dissipates heat with one that does not, for example, model 7501-24.
3. Lower the temperature of the room where the equipment is installed.
4. Use an external power supply to power the shelf. This will reduce the internal power dissipation.

For an example of the temperature calculation for a 5-card Shelf CCC model 751112/15, refer to Table 10 on page 49.

Table 10: Temperature Calculation Example

Slot No.	Model	Power Consumption	Power Dissipation	Max. Operating Temperature
1	751339SP	10 W at -48 Vdc	5 W	65°C (149°F)
2	7501-24	0 W	0 W	65°C (149°F)
3	7501-16C	6 W at -48 Vdc	6 W	50°C (122°F)
4	7501-16B	8.4 W at -24 Vdc	8.4 W	50°C (122°F)
5	751322/2	3.6 W at -48 Vdc	3.5 W	65°C (149°F)
-24 Vdc Internal Power Supply	751313MC	N/A	25% of Total power consumption at -24 Vdc = 2.1 W	65°C (149°F)
-48 Vdc Internal Power Supply	751318MC	N/A	25% of Total power consumption at -48 Vdc = 4.9 W	65°C (149°F)
		Total power consumption: 8.4 W at -24 Vdc 19.6 W at -48 Vdc	Total power dissipation: 29.9W	Highest allowable temperature: 50°C (122°F)
Temperature inside the shelf =(total power dissipation x shelf thermal resistance) + room temp.				

Temperature Calculation Example Results:

If the room temperature = 22° C (71.5°F):
Temperature inside the shelf =
29.9W x 0.41°C/W + 22°C = 34.3°C
or
29.9W x 0.74°F/W + 71.5°F = 93.6°F

3.9 Card Insertion

After all thermal considerations have been taken into account, insert the cards into the shelf and close and secure the cover with the nuts supplied.

NOTE

- To close the cover properly, you must first secure the bottom of the cover before joining the holes with their respective screws. This procedure is very important in order to prevent damage to the cover.

Once the temperature of the shelf has been calculated, the desired cards can be inserted, and the cover replaced with the supplied nuts. For information relevant to any of the cards, refer to their respective documentation.

➤ **To insert a card or cards into the shelf:**

1. Push up on the yellow retaining clip slightly with one hand
2. Insert the cards with the other hand.
3. Close and secure the cover by fastening the wing nuts.

NOTE

- The yellow retaining clips prevent the dislodging of cards due to vibration when the shelf is mounted near mechanical equipment
- Two spare yellow retaining clips have been included with the installation kit to be used in the event that a clip becomes unusable.
- To prevent minor injury to your fingers when removing a card from the shelf, use your right hand only. Push up on the yellow retaining clip with your right thumb and then pull the card out.

DANGER

- The cover must be kept closed and secured at all times in order to protect personnel from potentially hazardous voltages, and to prevent damage to the cover.

Appendix A

Acronyms

A 1 Acronyms

ADSL	Asymmetric Digital Subscriber Line
AUX	Auxiliary
AWG	American Wire Gauge
CCC	Color Coding Convention
CO	Central Office
CSA	Canadian Standards Association
CT	Center Tap
DTU	Data Terminal Unit
ESD	Electrostatic Discharge
FCC	Federal Communications Commission
GND	Ground
GPR	Ground Potential Rise
IEEE	Institute of Electrical and Electronics Engineers
H4TU-C	HDSL4 Terminal Unit - Central Office
HDSL	High speed Digital Subscriber Line
HTU-R	HDSL Terminal Unit - Remote unit
HVI	High Voltage Interface
MD	Manufacture Discontinued
PCB	Printed Circuit Board
NO	Normally Open
PIC	Polyethylene Insulated Cable

PWR	Power
RTU	Remote Termination Unit
RMT	Remote
RX	Receive
TX	Transmit
UL	Underwriters Laboratory
UPS	Uninterruptible Power Supply