TeleLite™

Pedestal Assembly, including One 3-Position Shelf and Fiber Routing Guide (7220PE-10) Description and Installation Guide

925W720116-01E

Positron Inc.

Contents

Chapter 1 – General Information

1.1 Publication Information 6

1.2 About this Guide 7
Related Documentation. 7
Positron Products and Services 7

1.3 Service and Support 8
Technical Customer Support. 8
Customer Training. 8
Repair Service. 9

1.4 Warranty 10
Limitation of Liability 10
Cancellation and Rescheduling Charges 11

Chapter 2 – Overview

2.1 Introduction 14
TeleLite Pedestal Assembly and 3-Position Shelf. 14

2.2 TeleLite System Introduction 15
300 V Point 15

Chapter 3 – Installation

3.1 Installation 20

3.2 Installation Outside the 300 V Point 20
Pedestal Physical Installation 20
Serving Cable 22
Ground Connector. 22

3.3 Installation Inside the 300 V Point 23
Pedestal Physical Installation 23

Serving Cable 26
Ground Connector 26

Chapter 4 – Integrated Access Interface

4.1 The Integrated Access Interface 28
Fuse and Alarm Contact 28
Local Alarm 1 and Local Alarm 2 28
Remote Alarm 1 and Remote Alarm 2 (optional function) 28

4.2 Electrical Specifications 30

4.3 Troubleshooting 30

Appendix A – Acronyms

Acronyms 32

Chapter 1

General Information

1.1 Publication Information

© 2011 Positron Inc.

TeleLite Pedestal Assembly, including. One 3-Position Shelf and Fiber Routing Guide (7220PE-10)
Description and Installation Guide
Part number: 925W720116-01E

Publication date: October 31, 2011

Published By
Positron Inc.
5101 Buchan Street
Montreal, Québec, Canada
H4P 2R9
US and Canada: 1-888-577-5254
International: 1-514-345-2220

Trademarks
TeleLite is a trademark of Positron Inc.

Product names, other than Positron's, mentioned herein may be trademarks and/or registered trademarks of their respective companies

Confidentiality Notice
The information contained in this document is the property of Positron Inc. Except as specifically authorized in writing by Positron Inc., the holder of this document: 1) shall keep all information contained herein confidential and shall protect same in whole or in part from the disclosure and dissemination to all third parties, and 2) shall use same for operating and maintenance purposes only.

Disclaimer Notice
Although Positron Inc. has made every effort to ensure the accuracy of the information contained herein, this document is subject to change without notice.

1.2 About this Guide

This guide introduces you to the TeleLite Pedestal Assembly, including. One 3-Position Shelf and Fiber Routing Guide (7220PE-10) and how to install it. This guide was designed to be read from beginning to end.

1.2.1 Related Documentation

To order any manuals, please contact your customer service representative.

1.2.2 Positron Products and Services

Positron engineers and manufactures high voltage isolation products to protect personnel and telecommunications circuits in high voltage areas that are susceptible to the effects of Ground Potential Rise (GPR).

Positron is the leader in isolation technology with its Teleline wireline products and TeleLite optical fiber wireline isolation/protection product families. Positron provides total flexibility in product configuration – from standalone units protecting a single circuit to high-capacity, multi-shelf HVI preconfigured systems.

Positron also provides a wide range of consulting, analysis and training services for communications companies and electrical utilities.

Full details and contact information are available at www.PositronPower.com

1.3 Service and Support

Table 1: Positron Contact Information

General information:	Positron Inc. 5101 Buchan Street, Suite 220 Montreal, Quebec, Canada H4P 2R9 US and Canada: 1-888-577-5254 International: 1-514-345-2220 Fax: 514-345-2271 E-mail: info@positronpower.com Website: www.positronpower.com
Customer Service and Repairs:	US and Canada: 1-888-577-5254 International: 1-514-345-2220 E-mail: customerservice@positronpower.com

1.3.1 Technical Customer Support

Positron is committed to providing excellent ongoing technical support to its customers. A team of specialists is always available for telephone consultations or for on-site visits to assist in the maintenance and troubleshooting of Positron equipment.

For pricing information or assistance in the planning, configuration and implementation of the installation of equipment, contact Technical Customer Service.

1.3.2 Customer Training

Full customer training courses on High Voltage Interface (HVI) are also available. For more information, contact Positron.

1.3.3 Repair Service

All warranty repairs are performed at no cost. Positron reserves the right to repair or replace any equipment that has been found to be defective.

For information about out-of-warranty repairs, contact Positron's Repair Department. Due to the varied nature of repairs, no specific turnaround can be guaranteed, but average turnaround time is 20 working days from date of receipt. In emergency situations, special arrangements can be made. All repaired items are warranted for a period of 90 days.

Before returning any items to Positron for repair, warranty repair or replacement, call the Repair department to obtain a Return Material Authorization (RMA) number. Parts returned without RMA numbers cannot be accepted. The RMA number must always be clearly marked on all boxes, crates, and shipping documents. Bulk repairs (more than five items) will require additional processing time, so please take this into consideration when requesting an RMA number.

To accelerate the repair process, whenever possible, include a report detailing the reason for return with the unit(s). Also, please include the name and phone number of a person who can be contacted should our Repair department need further information.

When packing items being returned for repair, please ensure they are properly packed to avoid further damage. TeleLite plug-in cards should never be shipped while installed in a shelf; this will cause damage that can extend the repair period.

1.4 Warranty

Subject to the provisions of this paragraph, Positron warrants that the equipment shall perform in accordance with Positron's specifications. The warranty remains valid for one (1) year from the date of shipment unless otherwise stipulated in the contract. The warranty fully covers workmanship, materials and labor. Positron shall, at its sole discretion, repair or replace the problem unit.

Freight costs to ship defective equipment to Positron are borne by the Customer, with return of replaced or repaired equipment to be at Positron's expense.

1.4.1 Limitation of Liability

Subject to anything to the contrary contained herein, Positron's sole obligation and liability and the customer's sole remedy for Positron's negligence, breach of warranty, breach of contract or for any other liability in any way connected with or arising out of, the equipment or any services performed by Positron shall be as follows:

- In all situations involving performance or non-performance of the equipment or any component thereof, the customer's sole remedy shall be, at Positron's option, the repair or replacement of the equipment or said component.
- For any other claim in any other way related to the subject matter of any order under, the customer shall be entitled to recover actual and direct damages; provided that Positron's liability for damages for any cause whatsoever, and regardless of the form of the action, whether in contract or in tort (including negligence), shall be limited to the value of the order.

Positron shall not be obligated to repair or replace any item of the equipment which has been repaired by others, abused or improperly handled, improperly stored, altered or used with third party material or equipment, which material, or equipment may be defective, of poor quality or incompatible with the equipment supplied by Positron, and Positron shall not be obligated to repair or replace any component of the equipment which has not been installed according to Positron specifications.

IN NO EVENT SHALL POSITRON BE LIABLE FOR ANY INDIRECT, INCIDENTAL, SPECIAL, CONSEQUENTIAL, PUNITIVE, EXEMPLARY OR SIMILAR OR ADDITIONAL DAMAGES INCURRED OR SUFFERED INCLUDING LOSS OF PROFITS, LOSS OF REVENUES, LOSS OF DATA, LOSS OF

BUSINESS INFORMATION, LOSS OF GOODWILL, LOSS OF EXPECTED SAVINGS OR BUSINESS INTERRUPTION ARISING OUT OF OR IN CONNECTION WITH THE EQUIPMENT, A PURCHASE ORDER SUPPLIES, MAINTENANCE SERVICES OR OTHER SERVICES FURNISHED HEREUNDER, EVEN IF POSITRON HAS BEEN ADVISED OR IS AWARE OF THE POSSIBILITY OF SUCH DAMAGES.

EXCEPT AS EXPRESSLY SET FORTH IN THIS AGREEMENT, POSITRON DISCLAIMS ANY FURTHER CONDITIONS, REPRESENTATIONS OR WARRANTIES, WHETHER WRITTEN OR ORAL, EXPRESSED OR IMPLIED, INCLUDING THE CONDITIONS AND WARRANTIES OF MERCHANTABILITY, MERCHANTABLE QUALITY, FITNESS FOR A PARTICULAR PURPOSE, TITLE, PERFORMANCE AND THOSE ARISING FROM STATUE, TO THE EXTENT PERMITTED BY LAW. POSITRON DOES NOT WARRANT THAT THE SYSTEM WILL OPERATE WITHOUT INTERRUPTION OR THAT IT WILL BE ERROR FREE.

1.4.2 Cancellation and Rescheduling Charges

Should the customer cancel, prior to shipment, any part of an order, the customer agrees to pay to Positron cancellation charges, not as a penalty, which shall total all expenses, including labor expenses, incurred by Positron prior to said cancellation. Equipment that has been specially developed for the customer's specific applications shall not be subject to cancellation. Cancellation or rescheduling is not permissible after shipment of the System.

Chapter 2

Overview

2.1 Introduction

2.1.1 TeleLite Pedestal Assembly and 3-Position Shelf

The TeleLite Pedestal Assembly, including One 3-Position Shelf and Fiber Routing Guide (7220PE-10) is a freestanding pedestal equipped with a self-locking cover housing a Positron TeleLite 720013 3-Position Shelf. It provides limited environmental protection and full access to the shelf. The cover of the unit is dark green and features a hex-head locking system and anti-insect vents.

Figure 1: TeleLite Pedestal Assembly (7220PE-10)

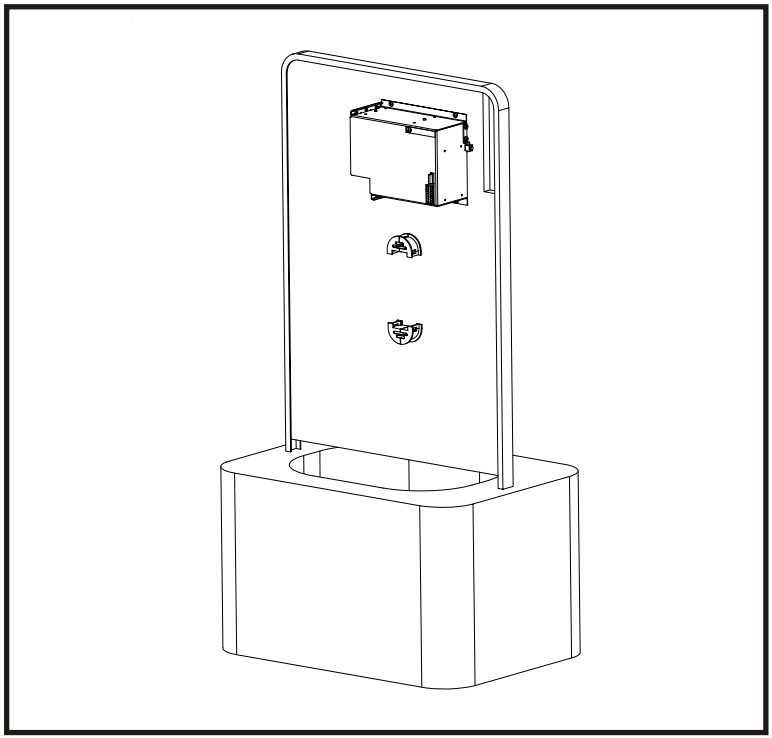

2.2 TeleLite System Introduction

TeleLite provides electrical isolation between two points on a telecom landline. Its purpose is to increase electrical isolation between the CO (Central Office) side and Station side. The increase in electrical isolation is achieved by using a fiber optic link. The Station side unit is located either inside or outside the building. The CO side must be located far enough from the Station side so that the GPR does not increase above 300 V with respect to the CO.

The TeleLite system is divided into two parts: the CO side unit and the Station side unit. Each unit is composed of one shelf. Each shelf has three slots for line cards and features an integrated Access interface for 48 Vdc. For information about the integrated Access interface, see Chapter 4. The shelf backplane does not provide for any telecom connection since all connections (except local power) will be made directly to the RJ-11/RJ-45 connectors, located on the front panel of each card.

2.2.1 300 V Point

The 300 V point for an installation is defined by the electrical parameters of the substation. This is the point where the Ground Potential Rise of the site is reduced to 300 V or less. This is usually a new or existing cable closure.

The pedestal can be installed outside the 300 V point with the fiber optic cable crossing it, or just inside the 300 V point such that it is exposed to no more than 10 kV.

For an illustration of how the Pedestal Assembly and 3-Position Shelf (7220PE-10) is used as a part of the high voltage interface, see the diagrams below.

Figure 2: Installation Inside the 300 V Point

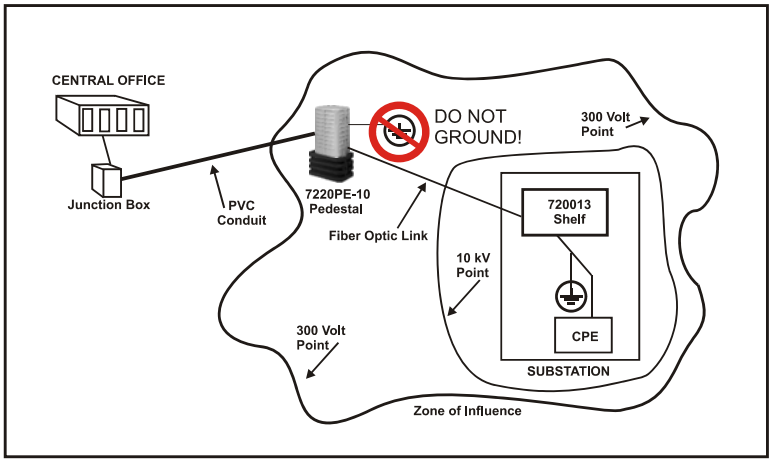

Figure 3: Installation Outside the 300 V Point

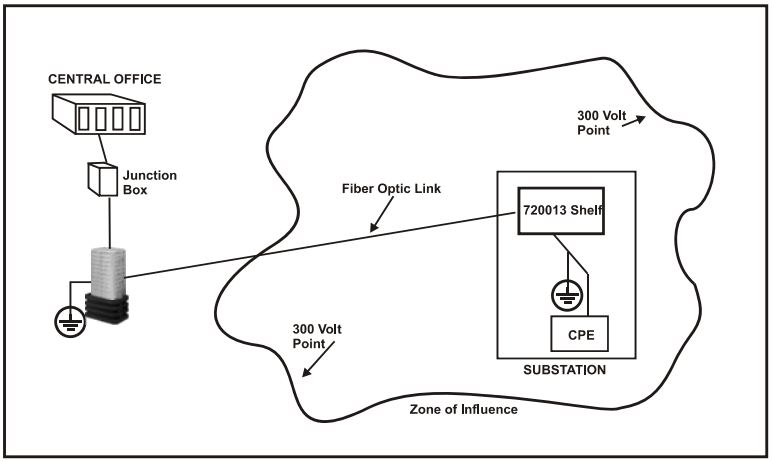

Table 2: Physical Specifications

Parameter	Specification
Height of base	38.1 cm (15”)
Width of base	63.5 cm (25”)
Depth of base	45.7 cm (18”)
Height of cover	87.6 cm (34 1/2”)
Width of cover	59.7 cm (23 1/2”)
Depth of cover	45.1 cm (17 3/4”)
Weight	26.3 kg (58 lbs.)

Chapter 3

Installation

3.1 Installation

Most installations of the pedestal assembly will be beyond the 300V point (outside the Zone of Influence (ZOI). If the pedestal is to be installed within the ZOI where voltages higher than 300V can be expected, see section 3.3 on page 23 for specific considerations.

3.2 Installation Outside the 300 V Point

Installations should conform to local recommended practices for the protection of wire-line communication facilities serving electric supply locations.

The equipment must be installed in a restricted or secure area to prevent tampering.

ATTENTION
ELECTROSTATIC SENSITIVE DEVICES
HANDLE ONLY AT STATIC SAFE WORKSTATION

ESD Precaution

INCORRECT HANDLING MAY VOID WARRANTY

These procedures must be followed when handling an electrostatic sensitive device.

- A grounded wrist strap must be worn at all times during installation.
- When unpacking, place the antistatic bag containing the device on an electrostatic discharge (ESD) safe surface. An ESD safe surface is a conductive surface connected directly to an earth ground.
- When moving, carry the device in an ESD safe container or the antistatic bag, provided with the device.

3.2.1 Pedestal Physical Installation

Follow the instructions supplied with the pedestal by its manufacturer to install the pedestal itself in the ground.

➤ **To install the Pedestal and 3-Position Shelf Outside the 300 V Point:**

1. Verify that you have the following customer-provided tools and hardware required to install the shelf:
   - 7/16” hex head wrench
   - Cable clamps and mounting hardware for routing cables exterior to the shelf (quantity determined by the cable lengths)
2. Cut the packing straps holding the unit to the pallet.
3. Unpack the unit and remove any packing material.
4. Remove any other loose items and set aside for later use.
5. Install the pedestal in the ground following the pedestal’s manufacturer-supplied documentation. It is recommended that the cover stay in place during the installation process.
6. Once the pedestal is in its final location, use the hex-head wrench to open the cover and set it aside.
7. Insert any required cards into the shelf.
8. Route the fiber optic cables using the fiber management system.
9. Route the CO cabling as required.

CAUTION Ensure that no wiring comes to within 4.5 cm (2”) of the metal brackets of the pedestal assembly.

10. Once the work inside the pedestal has been completed, replace the cover and tighten the hex-head fasteners.

3.2.2 Serving Cable

CAUTION

The serving cable to the CO unit must be routed and installed according to local regulation.

The CO unit must be installed outside the zone of influence where the potential is less than 300 V.

Use an all-dielectric fiber and non-conducting conduit between the CO and Station side unit and follow local regulations.

3.2.3 Ground Connector

CAUTION

To ensure safety of personnel, Positron recommends following these guidelines:

- This equipment must be permanently connected to earth using the ground lug on the right side of the shelf
- This equipment must be located in the same immediate area (such as adjacent cabinets) as any other equipment that is connected to it.

3.3 Installation Inside the 300 V Point

Installations should conform to local recommended practices for the protection of wire-line communication facilities serving electric supply locations.

The equipment must be installed in a restricted or secure area to prevent tampering.

3.3.1 Pedestal Physical Installation

Follow the instructions supplied with the pedestal by its manufacturer to install the pedestal itself in the ground.

➤ **To install the Pedestal and 3-Position Shelf Inside the 300 V Point:**

1. Verify that you have the following customer-provided tools and hardware required to install the shelf:
   - 7/16” hex head wrench
   - Cable clamps and mounting hardware for routing cables exterior to the shelf (quantity determined by the cable lengths)
2. Cut the packing straps holding the unit to the pallet.
3. Unpack the unit and remove any packing material.
4. Remove any other loose items and set aside for later use.
5. Install the pedestal in the ground following the pedestal’s manufacturer-supplied documentation. It is recommended that the cover stay in place during the installation process.
6. Once the pedestal is in its final location, use the hex-head wrench to open the cover and set it aside.
7. Insert any required cards into the shelf.
8. Route the fiber optic cables using the fiber management system.
9. Route the CO cabling as required.

CAUTION Ensure that no wiring comes to within 4.5 cm (2”) of the metal brackets of the pedestal assembly.

10. Ensure that no ground is connected to the ground lug or to the cable shield.
11. Affix the label shown in Figure 4 on page 25 to the face of the 3-position shelf as shown.
12. Once the work inside the pedestal has been completed, replace the cover and tighten the hex-head fasteners.

Figure 4: Warning Label

IF INSTALLED INSIDE THE Z.O.I APPLY THE LABEL BELOW TO THE SHELF.

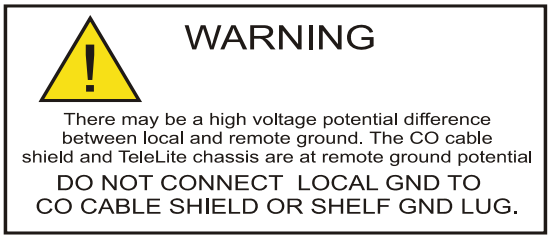

3.3.2 Serving Cable

CAUTION

- The serving cable to the CO unit must be routed and installed according to local regulation.
- The CO unit can be installed inside the zone of influence where the potential is less than 10,000 V.
- Use an all-dielectric fiber and non-conductive conduit between the CO and Station side unit and follow local regulations.

3.3.3 Ground Connector

CAUTION

To ensure safety of personnel, Positron recommends following these guidelines:

- If the splicing of the dedicated cable to the general use cable is started or accomplished early in the designed work sequence, a safety hazard will exist. That safety hazard will then require the use of a rubber mat and rubber safety gloves for the remaining installation work to protect personnel against Ground Potential Rise and/or transients.
- Additionally, as a safety issue, it is recommended that the installation be done on a clear day with no lightning activity.
- This equipment must **NOT** be grounded as this provides a path for dangerous voltages to enter.
- This equipment must be located in the same immediate area (such as adjacent cabinets) as any other equipment that is connected to it.

Chapter 4

Integrated Access Interface

4.1 The Integrated Access Interface

The integrated access connector into the 720013 shelf provides:

- Electrical connection between the backplane and the local -48 Vdc
- Fuse and alarm contact
- Protection against polarity reversal and transient

4.1.1 Fuse and Alarm Contact

The access connector on the Station side and on the CO side (if provisioned) have Return and -48 V pins to provide power to the shelf. It also has a fuse alarm pin that provides -48 V when the access interface fuse is blown. This provisions for an external alarm indication.

4.1.2 Local Alarm 1 and Local Alarm 2

If any circuit card on the Station side shelf experiences a fault condition, the local alarm relay contact (normally open) between pins (local alarm 1 and local alarm 2) will close, allowing current to flow through an externally provided circuit. This mechanism can be used to provision an audio or visual indication of a fault condition.

4.1.3 Remote Alarm 1 and Remote Alarm 2 (optional function)

If any circuit on the CO side shelf experiences a fault condition, this indication is communicated over the fiber to the Station side shelf access connector. The remote alarm contact between pins (remote alarm 1 and remote alarm 2) will close, allowing current to flow through an externally provided circuit. This mechanism can be used to provision an audio or visual indication of a fault condition.

NOTE The local and remote alarm pins on the Shelf Access Connector CO side (if provisioned) are not used since the equipment is located at the mid span, where typically there is no equipment to monitor alarms.

Table 3: Access Connector Pinouts

Terminal Block	Station Side Function	CO Side Function
RTN	Supplies -48 Vdc Return	Supplies -48 Vdc Return
-48 V	Supplies -48 Vdc	Supplies -48 Vdc
Fuse Alarm	Provides -48 Vdc when fuse is blown	Provides -48 Vdc when fuse is blown
Local Alarm 1	Normally open relay contact provides dry contact closure for an audio or visual indication of a fault condition on the Station side	Not used
Local Alarm 2	Normally open relay contact provides dry contact closure for an audio or visual indication of a fault condition on the Station side	Not used
Remote Alarm 1	Normally open relay contact provides dry contact closure for an audio or visual indication of a fault condition on the CO side	Not used
Remote Alarm 2	Normally open relay contact provides dry contact closure for an audio or visual indication of a fault condition on the CO side	Not used

NOTE The TeleLite integrated Access interface requires a 2 A fuse. The fuse is replaceable. For ordering information, see section 1.3 on page 8.

NOTE The power to the integrated Access interface is polarity sensitive. No damage incurred, but system does not work if polarity is wrong.

CAUTION For continued protection against risk of fire, replace only with same type and rating of fuse.

Figure 5: Shelf Access Connector

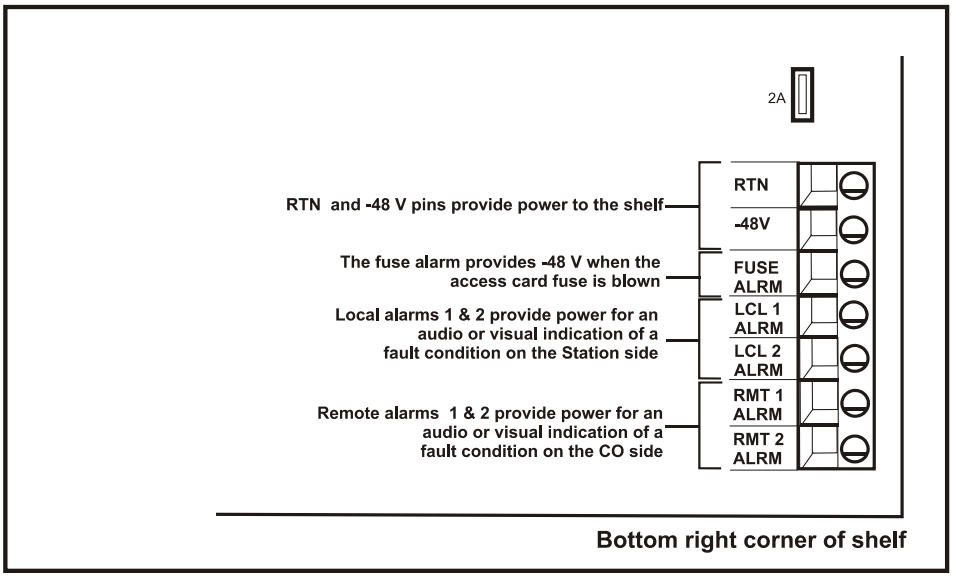

4.2 Electrical Specifications

Parameter	Specification
Shelf Voltage Input	-40.8 Vdc to -57.6 Vdc
Shelf Maximum Current	1 A
Alarm Contact Rating	62.5VA, 125Vac, 2A

4.3 Troubleshooting

Before calling customer service, make sure that:

- The fuse is not blown
- 48 Vdc is available on the terminal block, if locally-powered.

If these have been verified, the problem may be line-related. Refer to plug-in line card Description and Installation guide.

Appendix A

Acronyms

Acronyms

ALRM	Alarm
CFJ	Copper Fiber Junction
CO	Central Office
CPE	Customer Premises Equipment
ESD	Electro Static Discharge
GPR	Ground Potential Rise
HVI	High Voltage Interface
LCL	Local
LED	Light Emitting Diode
OEI	Optical Electrical Interface
RMT	Remote
RTN	Return
ZOI	Zone of Influence