Teleline™

Plug-in 4-wire AC Data Card, 7501-24
Description and Installation Guide

925W751029-10E

POSITRON

Positron Inc.

Contents

Chapter 1 – General Information

1.1 Publication Information 6

1.2 About this Guide 7
Related Documentation. 7
Positron Products and Services 7

1.3 Compliance Information 8
FCC Part 15 8

1.4 Service and Support 9
Positron Contact Information. 9
Technical Customer Support. 9
Customer Training. 9
Product Safety. 9
Repair Service. 10

1.5 Teleline Warranty 11
Limitation of Liability 11
Cancellation and Rescheduling Charges 12

Chapter 2 – Overview

2.1 Introduction 14

2.2 Applications 16

2.3 Hardware Description 17
Isolation Transformers 18
Simplex Sealing Loop 18

2.4 Technical Specifications 19

Chapter 3 – Installation

3.1 Installation 22
To install the 4-wire AC Data Card 24
To verify the installation: 24

3.2 Maintenance 24

Appendix A – Acronyms

Acronyms 26

Chapter 1

General Information

1.1 Publication Information

© 2010 Positron Inc.

Teleline Plug-in 4-wire AC Data Card, 7501-24
Description and Installation Guide
Part number: 925W751029-10E

Publication date: January 28, 2010

Published By
Positron Inc.
5101 Buchan Street, Suite 220
Montreal, Quebec, Canada
H4P 2R9
Telephone: US and Canada: 1-888-577-5254
International: 1-514-345-2220

Trademarks
Teleline is a trademark of Positron Inc.

Product names, other than Positron's, mentioned herein may be trademarks and/or registered trademarks of their respective companies

Confidentiality Notice
The information contained in this document is the property of Positron Inc. Except as specifically authorized in writing by Positron Inc., the holder of this document: 1) shall keep all information contained herein confidential and shall protect same in whole or in part from the disclosure and dissemination to all third parties, and 2) shall use same for operating and maintenance purposes only.

Disclaimer Notice
Although Positron Inc. has made every effort to ensure the accuracy of the information contained herein, this document is subject to change without notice.

1.2 About this Guide

This guide introduces you to the Teleline Plug-in 4-wire Data Card, 7501-24 and its installation into Teleline shelves. This guide was designed to be read from beginning to end.

1.2.1 Related Documentation

For any other technical document relating this system installation or applications cards and shelves, please refer to the Positron Web site: www.PositronPower.com.

1.2.2 Positron Products and Services

Positron engineers and manufactures high voltage isolation products to protect personnel and telecommunications circuits in high voltage areas that are susceptible to the effects of Ground Potential Rise (GPR).

Positron is the leader in isolation technology with its Teleline wireline products and TeleLite optical fiber wireline isolation/protection product families. Positron provides total flexibility in product configuration – from standalone units protecting a single circuit to high-capacity, multi-shelf HVI preconfigured systems.

Positron also provides a wide range of consulting, analysis and training services for communications companies and electrical utilities.

Full details and contact information are available at www.PositronPower.com.

1.3 Compliance Information

1.3.1 FCC Part 15

This equipment has been tested and found to comply with the limits for a Class A digital device, pursuant to part 15 of the FCC Rules. These limits are designed to provide reasonable protection against harmful interference when the equipment is operated in a commercial environment. This equipment generates, uses, and can radiate radio frequency energy and, if not installed and used in accordance with the instruction manual, may cause harmful interference to radio communications. Operation of this equipment in a residential area is likely to cause harmful interference in which case the user will be required to correct the interference at his own expense.

Changes or modifications not expressly approved by the party responsible for compliance could void the user’s authority to operate the equipment.

1.4 Service and Support

1.4.1 Positron Contact Information

General information:	Positron Inc. 5101 Buchan Street, Suite 220 Montreal, Quebec, Canada H4P 2R9 US and Canada: 1-888-577-5254 International: 1-514-345-2220 Fax: 514-345-2271 E-mail: info@positronpower.com Website: www.positronpower.com
Customer Service and Repairs:	US and Canada: 1-888-577-5254 International: 1-514-345-2220 E-mail: customerservice@positronpower.com

1.4.2 Technical Customer Support

Positron is committed to providing excellent ongoing technical support to its customers. A team of specialists is always available for telephone consultations or for on-site visits to assist in the maintenance and troubleshooting of Positron equipment.

For pricing information or assistance in the planning, configuration and implementation of the installation of equipment, contact Technical Customer Service.

1.4.3 Customer Training

Full customer training courses on High Voltage Interface (HVI) are also available. For more information, contact Positron.

1.4.4 Product Safety

This equipment is compliant with CSA CAN/CSA-C22.2 No. 60950-1-07.

1.4.5 Repair Service

All warranty repairs are performed at no cost. Positron reserves the right to repair or replace any equipment that has been found to be defective.

For information about out-of-warranty repairs, contact Positron's Repair Department. Due to the varied nature of repairs, no specific turnaround can be guaranteed, but average turnaround time is 20 working days from date of receipt. In emergency situations, special arrangements can be made. All repaired items are warranted for a period of 90 days.

Before returning any items to Positron for repair, warranty repair or replacement, call the Repair department to obtain a Return Material Authorization (RMA) number. Parts returned without RMA numbers cannot be accepted. The RMA number must always be clearly marked on all boxes, crates, and shipping documents. Bulk repairs (more than five items) will require additional processing time, so please take this into consideration when requesting an RMA number.

To accelerate the repair process, whenever possible, include a report detailing the reason for return with the unit(s). Also, please include the name and phone number of a person who can be contacted should our Repair department need further information.

When packing items being returned for repair, please ensure they are properly packed to avoid further damage. Plug-in cards should never be shipped while installed in a shelf; this will cause damage that can extend the repair period.

1.5 Teleline Warranty

Subject to the provisions of this paragraph, Positron warrants that the equipment shall perform in accordance with Positron's specifications. The warranty remains valid for five (5) years from the date of shipment. The warranty fully covers workmanship, materials and labor. Positron shall, at its sole discretion, repair or replace the problem unit.

Freight costs to ship defective equipment to Positron are borne by the Customer, with return of replaced or repaired equipment to be at Positron's expense.

1.5.1 Limitation of Liability

Subject to anything to the contrary contained herein, Positron's sole obligation and liability and the customer's sole remedy for Positron's negligence, breach of warranty, breach of contract or for any other liability in any way connected with or arising out of, the equipment or any services performed by Positron shall be as follows:

- In all situations involving performance or non-performance of the equipment or any component thereof, the customer's sole remedy shall be, at Positron's option, the repair or replacement of the equipment or said component.
- For any other claim in any other way related to the subject matter of any order under, the customer shall be entitled to recover actual and direct damages; provided that Positron's liability for damages for any cause whatsoever, and regardless of the form of the action, whether in contract or in tort (including negligence), shall be limited to the value of the order.

Positron shall not be obligated to repair or replace any item of the equipment which has been repaired by others, abused or improperly handled, improperly stored, altered or used with third party material or equipment, which material, or equipment may be defective, of poor quality or incompatible with the equipment supplied by Positron, and Positron shall not be obligated to repair or replace any component of the equipment which has not been installed according to Positron specifications.

IN NO EVENT SHALL POSITRON BE LIABLE FOR ANY INDIRECT, INCIDENTAL, SPECIAL, CONSEQUENTIAL, PUNITIVE, EXEMPLARY OR SIMILAR OR ADDITIONAL DAMAGES INCURRED OR SUFFERED INCLUDING

LOSS OF PROFITS, LOSS OF REVENUES, LOSS OF DATA, LOSS OF BUSINESS INFORMATION, LOSS OF GOODWILL, LOSS OF EXPECTED SAVINGS OR BUSINESS INTERRUPTION ARISING OUT OF OR IN CONNECTION WITH THE EQUIPMENT, A PURCHASE ORDER, SUPPLIES, MAINTENANCE SERVICES OR OTHER SERVICES FURNISHED HEREUNDER, EVEN IF POSITRON HAS BEEN ADVISED OR IS AWARE OF THE POSSIBILITY OF SUCH DAMAGES.

EXCEPT AS EXPRESSLY SET FORTH IN THIS AGREEMENT, POSITRON DISCLAIMS ANY FURTHER CONDITIONS, REPRESENTATIONS OR WARRANTIES, WHETHER WRITTEN OR ORAL, EXPRESSED OR IMPLIED, INCLUDING THE CONDITIONS AND WARRANTIES OF MERCHANTABILITY, MERCHANTABLE QUALITY, FITNESS FOR A PARTICULAR PURPOSE, TITLE, PERFORMANCE AND THOSE ARISING FROM STATUTE, TO THE EXTENT PERMITTED BY LAW. POSITRON DOES NOT WARRANT THAT THE SYSTEM WILL OPERATE WITHOUT INTERRUPTION OR THAT IT WILL BE ERROR FREE.

1.5.2 Cancellation and Rescheduling Charges

Should the customer cancel, prior to shipment, any part of an order, the customer agrees to pay to Positron cancellation charges, not as a penalty, which shall total all expenses, including labor expenses, incurred by Positron prior to said cancellation. Equipment that has been specially developed for the customer's specific applications shall not be subject to cancellation. Cancellation or rescheduling is not permissible after shipment of the System.

Chapter 2

Overview

2.1 Introduction

The Plug-in 4-wire AC Data Card, model 7501-24, provides high voltage isolation between an incoming dedicated 4-wire data line and a data transmitting/receiving device located in the substation.

Its features include the following:

- The card is suitable for transmission at frequencies of up to 200 kHz (64 kb/s) provided the data line is conditioned for operation at this speed.
- The card does not require power input from either the Central Office (CO) or the Teleline shelf.
- The card permits the flow of CO simplex sealing current from one pair to another. Simplex sealing current is not transmitted across the isolation gap to the Station side.

NOTE

- This card is not compatible with old generation Teleline shelves 7501-08, 7501-09, and 7501-27.

For a view of the Plug-in 4-wire AC Data Card, see Figure 1 on page 15.

Figure 1: Model 7501-24 Component Layout (Only Major Components Shown)

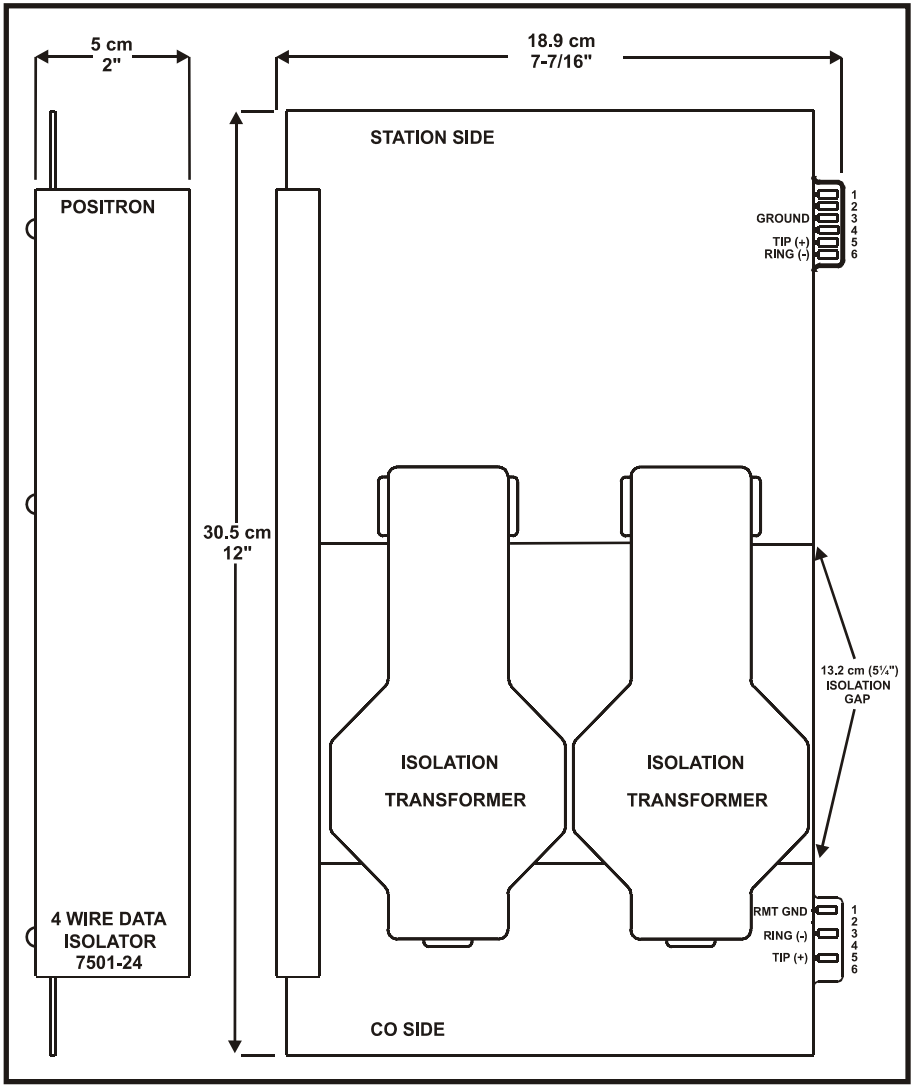

2.2 Applications

The applications of the Plug-in 4-wire AC Data Card include the following:

- Dedicated line modems
- Supervisory control and data acquisition (SCADA) systems
- Tone relay control systems
- Analog carrier systems
- Any other equipment using tone related signalling
- Digital data service (56 or 64 kb/s)

Figure 2: High Voltage Interface Application

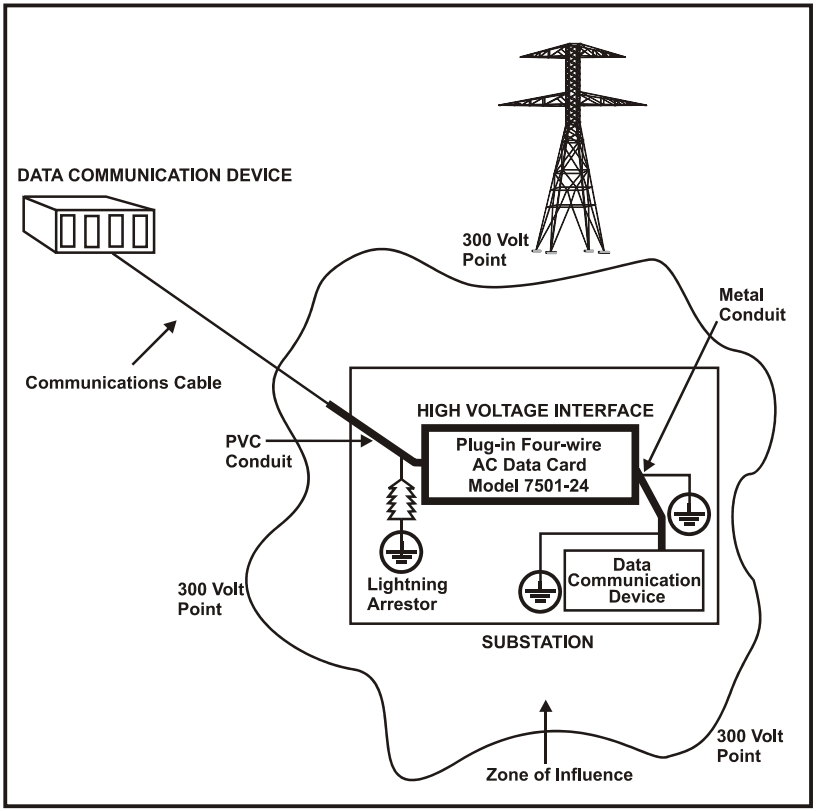

2.3 Hardware Description

The 4-wire AC Data Card is comprised of two sides. The Station side is located on the upper portion of the card and the CO side is located on the lower portion of the card. The Station side is separated from the CO side by the isolation transformers which create a 13.2 cm (5¼ inch) isolation gap.

Figure 3: Block Diagram

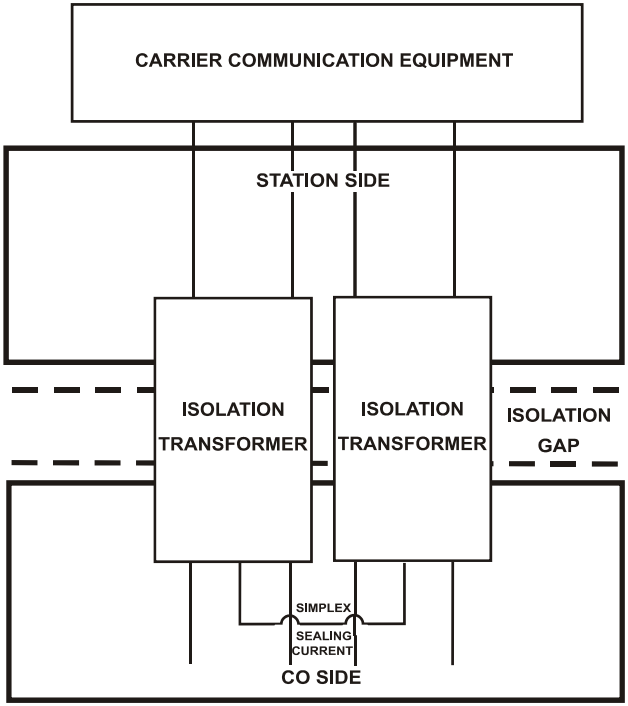

The following is a description of the elements of the 4-wire AC Data Card block diagram.

2.3.1 Isolation Transformers

The Isolation Transformers provide the 13.2 (5¼') isolation gap for the card.

2.3.2 Simplex Sealing Loop

The center taps of the two transformers are shorted together on the PCB to allow the Simplex Sealing current to flow across the pairs.

2.4 Technical Specifications

For physical specifications for model 7501-24, see Table 2 on page 20.

Table 1: Electrical Specifications (measured at 25°C or 77°F, 50% R.H.)

Parameter	Specifications	
ISOLATION DATA:		
Isolation resistance	100 000 MΩ	
Metallic surge	3 kV maximum	
Insulation voltage	50 kV_{rms} (70 kV peak)	
INPUT VOLTAGE REQUIREMENT	None	
POWER DISSIPATION	None	
TRANSMISSION DATA:		
Longitudinal balance (CO side)	>80 dB @ 60 Hz; >80 dB @ 300 to 3400 Hz	
Echo return loss at either side with opposite side terminated at 600 or 900 Ω	Better than 25 dB	
Signing return loss at either side with opposite side terminated at 600 or 900 Ω	Better than 14 dB	
Crosstalk	Better than -77 dB from 300 to 3400 Hz measured at + 10 dBm	
Maximum voice level	Up to + 10 dBm with less than 1% harmonic distortion	
NOISE		
2 to 100 Hz	-60 dBm	
Voice band (C weighted message)	< 5 dBrnC	
Phase jitter	< 0.5°, 300 to 3400 Hz	
Impulse noise	Less than 1 count above 48 dBrnC in 30 minutes	
SIGNAL (900 Ω circuit, 0 dBm)	dB typ.	dB max.
Insertion loss @ 50 Hz	0.8	1.5
Insertion loss @ 100 Hz	0.5	1.0
Insertion loss @ 200 Hz	0.3	0.7
Insertion loss @ 1 kHz	0.2	0.7
Insertion loss @ 100 kHz	0.2	0.7
Insertion loss @ 300 kHz	0.5	1.2

Table 2: Physical Specifications

Parameter	Specifications
Operating temperature range	-20°C to +65°C (-4°F to +149°F)
Height	30.5 cm (12”)
Width	5.1 cm (2”)
Depth	18.9 cm (7-7/16”)
Weight	1.3 kg (2.9 lbs)

Chapter 3

Installation

3.1 Installation

ESD Precaution

INCORRECT HANDLING MAY VOID WARRANTY

These procedures must be followed when handling an electrostatic sensitive device.

- A grounded wrist strap must be worn at all times during installation.
- When unpacking, place the antistatic bag containing the device on an electrostatic discharge (ESD) safe surface. An ESD safe surface is a conductive surface connected directly to an earth ground.
- When moving, carry the device in an ESD safe container or the antistatic bag, provided with the device.

The Plug-in 4-wire AC Data Card plugs into any slot of the new generation Teleline 3-, 5-or 8-card Shelf. However, the card must be installed into the slot which has been pre-wired according to the installation diagram of the specific shelf.

To view the 4-wire AC Data using single 7501-24 card connections, refer to Figure 4 on page 23.

CAUTION

- Grounding of the card is done through the shelf. See the grounding section of the shelf's installation manual for more information.
- Stand on a thick rubber mat and wear rubber gloves during the installation procedures.
- It is preferable to perform these procedures on a clear dry day when a Ground Potential Rise (GPR) or transients are less likely to occur.

Figure 4: 4-wire AC Data Using Single 7501-24 Card

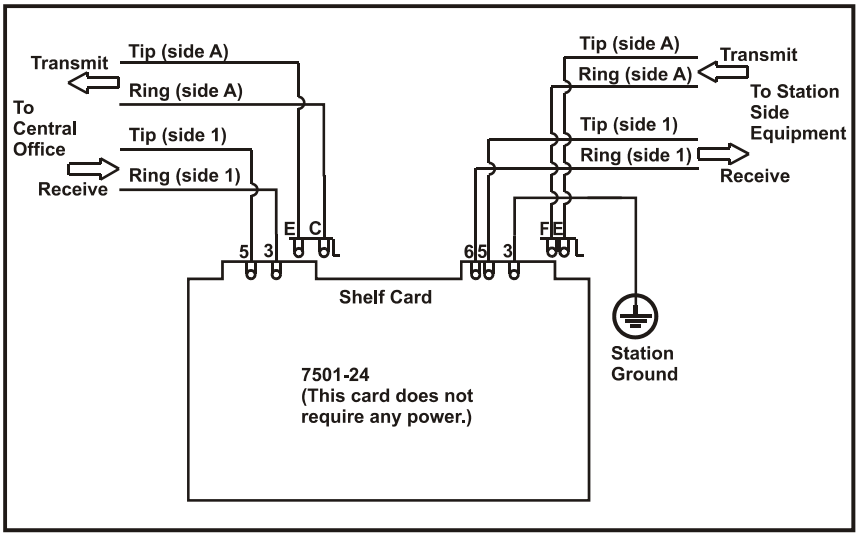

NOTE

- Station end Data equipment CANNOT be powered from the CO line side cable pairs using this type of card.
- An internal connection on the board loops back the CO side CT of the TRANSMIT and RECEIVE cable pairs.
- TRANSMIT and RECEIVE may be interchanged.

CAUTION

- Stand on a thick rubber mat and wear rubber gloves during the installation. It is preferable to perform these procedures on a clear dry day when a Ground Potential Rise (GPR) or transients are less likely to occur.

➤ To install the 4-wire AC Data Card

1. Unpack the 4-wire AC Data Card from its box. No unusual precautions need to be taken since the card does not have static-sensitive components.
2. Confirm that the isolation unit is a 4-wire AC Data Card by identifying the name and model number on the faceplate of the card.
3. The card must be inserted rightside up and may be plugged into the shelf with the power ON or OFF.
4. Slide the card into its designated pre-wired shelf slot until the two card-edge connectors lock into the Teleline shelf and the retaining clip snaps into place.

➤ To verify the installation:

1. Verify the installation by applying a data signal across the isolator and check that it has been received correctly.

3.2 Maintenance

NOTE

- Before maintenance disconnect telecom lines on all the cards to be serviced in the CO splice case and on the station punch block.
- If not possible Stand on a thick rubber mat and wear rubber gloves during the maintenance.
- It is preferable to perform these procedures on a clear dry day when a Ground Potential Rise (GPR) or transients are less likely to occur.

Appendix A

Acronyms

Acronyms

CO	Central Office
CSA	Canadian Standards Association
CSU	Channel Service Unit
DSU	Data Service Unit
FCC	Federal Communications Commission
GND	Ground
GPR	Ground Potential Rise
HVI	High-Voltage Interface
NIU	Network Interface Unit
PCB	Printed Circuit Board
RMA	Returned Material Authorization
RTU	Remote Termination Unit
UL	Underwriters Laboratories